ZONING BOARD OF APPEALS
AGENDA

Ralph Shields, Chair
Shelley LaMastra, Vice Chair
David Lawton
John McCoy
Taylor Meyer
Ian Shuff
Butch Stockover

Council Liaison: Ross Cunniff
Staff Liaison: Noah Beals

LOCATION:
Meeting will be held virtually

The City of Fort Collins will make reasonable accommodations for access to City services, programs, and activities and will make special communication arrangements for persons with disabilities. Please call 221-6515 (TDD 224-6001) for assistance.

REGULAR MEETING
JUNE 11, 2020
8:30 AM

Participation for this remote Zoning Board of Appeals meeting will be available online or by phone. No one will be allowed to attend in person.

Public Participation (Online): Individuals who wish to address the Zoning Board of Appeals via remote public participation can do so through Zoom at https://zoom.us/j/99148577216. Individuals participating in the Zoom session should also watch the meeting through that site.

The meeting will be available to join beginning at 8:15 a.m. on June 11, 2020. Participants should try to sign in prior to 8:30 a.m. if possible. For public comments, the Chair will ask participants to click the "Raise Hand" button to indicate you would like to speak at that time. Staff will moderate the Zoom session to ensure all participants have an opportunity to address the Board or Commission.

In order to participate:
Use a laptop, computer, or internet-enabled smartphone. (Using earphones with a microphone will greatly improve your audio).
You need to have access to the internet.
Keep yourself on muted status.
If you have any technical difficulties during the hearing, please email kscheidenhelm@fcgov.com.

Public Participation (Phone): If you do not have access to the internet, you can call into the hearing via phone. The number to dial 346-248-7799 or 669-900-9128, with webinar ID: 991 4857 7216.
(Continued on next page)

The meeting will be available beginning at 8:15 a.m. Please call in to the meeting prior to 8:30 a.m., if possible. For public comments, the Chair will ask participants to click the "Raise Hand" button to indicate you would like to speak at that time – phone participants will need to hit *9 to do this. Staff will be moderating the Zoom session to ensure all participants have an opportunity to address the Committee. Once you join the meeting: **keep yourself on muted status.** If you have any technical difficulties during the hearing, please email kscheidenhelm@fcgov.com.

Documents to Share: If residents wish to share a document or presentation, the Staff Liaison needs to receive those materials via email by 24 hours before the meeting.

Individuals uncomfortable or unable to access the Zoom platform or unable to participate by phone are encouraged to participate by emailing general public comments you may have to nbeals@fcgov.com. The Staff Liaison will ensure the Board or Commission receives your comments. If you have specific comments on any of the discussion items scheduled, please make that clear in the subject line of the email and send 24 hours prior to the meeting.

As required by City Council Ordinance 061, 2020, a determination has been made that holding an in-person hearing would not be prudent and that the matters to be heard are pressing and require prompt consideration. The written determination is contained in the agenda materials.

- **CALL TO ORDER and ROLL CALL**
- **APPEALS FOR VARIANCE TO THE LAND USE CODE**

1. **APPEAL ZBA200018**
   Address: 806 W. Mulberry St.
   Owner/Petitioner: Kevin Dewlen
   Zoning District: N-C-M
   Code Section: 4.8(D)(3)
   This is a request to exceed the maximum rear floor area by 266.5 square feet. The allowed rear floor area is 907.5 square feet. Of the proposed 345 square foot addition, 112 square feet is located in the rear half. The other 154.5 square feet was previously approved by ZBA190039.

2. **APPEAL ZBA200019**
   Address: 2524 W. Plum St.
   Owner/Petitioner: Adam Musielewicz
   Zoning District: R-L
   Code Section: 4.4(D)(2)(c); 4.4(D)(2)(d)
   Project Description:
   This is a request to build an accessory structure (yurt) in the rear and street side setbacks. The proposed location is 6 feet from the rear (north) property line which is encroaching 9 feet into the required 15 foot rear setback and 8 feet from the street side (west) property line which is encroaching 7 feet into the required street side setback.

3. **APPEAL ZBA200020**
   Address: 609 City Park Ave
   Owner: John Papile
   Petitioner: Mike Rush
   Zoning District: R-L
   Code Section: 4.4(D)(1); 4.4(D)(2)(d)
   Project Description:
   This request is for a variance to increase the allowable floor area by 93 square feet and to encroach into the required 15 foot side setback by 4 feet 4 inches.

4. APPEAL ZBA200021

Address:	420 N. Grant Ave.
Owner/Petitioner:	Gregory Menning
Zoning District:	N-C-M
Code Section:	4.8(D)(1), 4.8(E)(1)

Project Description:

This request is to return a parcel back to the originally two platted lots to allow two single family homes to be built. This requires a variance to reduce the 40 feet required minimum lot width by 5 feet and reduce the 5,000 square foot minimum lot size by 100 square feet for both lots.

- **OTHER BUSINESS**
- **ADJOURNMENT**

City of Fort Collins

Application Request
for Variance from the Land Use Code

The Zoning Board of Appeals has been granted the authority to approve variances from the requirements of Articles 3 and 4 of the Land Use Code. The Zoning Board of Appeals shall not authorize any use in a zoning district other than those uses which are specifically permitted in the zoning district. The Board may grant variances where it finds that the modification of the standard **would not be detrimental to the public good**. Additionally, the variance request must meet at least one of the following justification reasons:

(1) by reason of exceptional physical conditions or other extraordinary and exceptional situations unique to the property, including, but not limited to physical conditions such as exceptional narrowness, shallowness, or topography, the strict application of the code requirements would result in unusual and exceptional practical difficulties or undue hardship upon the occupant/applicant of the property, provided that such difficulties or **hardship** are not caused by an act or omission of the occupant/applicant (i.e. not self-imposed);

(2) the proposal will promote the general purpose of the standard for which the variance is requested **equally well or better than** would a proposal which complies with the standard for which the variance is requested;

(3) the proposal will not diverge from the Land Use Code standards except in a **nominal, inconsequential way** when considered in the context of the neighborhood.

This application is only for a variance to the Land Use Code. Building Code requirements will be determined and reviewed by the Building Department separately. When a building or sign permit is required for any work for which a variance has been granted, the permit must be obtained within 6 months of the date that the variance was granted.

However, for good cause shown by the applicant, the Zoning Board of Appeals may consider a one-time 6 month extension if reasonable and necessary under the facts and circumstances of the case. An extension request must be submitted before 6 months from the date that the variance was granted has lapsed.

Petitioner or Petitioner's Representative must be present at the meeting

Location: 300 LaPorte Ave, Council Chambers, Fort Collins, CO 80524

Date: Second Thursday of the month Time: 8:30 a.m.

Variance Address	806 W Mulberry St.	Petitioner's Name, if not the Owner	
City	Fort Collins, CO	Petitioner's Relationship to the Owner is	
Zip Code	80521	Petitioner's Address	806 W Mulberry St
Owner's Name	Kevin Dewlen	Petitioner's Phone #	970-219-0677
Code Section(s)		Petitioner's Email	kdewlen88@gmail.com
Zoning District	N-C-M	Additional Representative's Name	
Justification(s)	3. Nominal and inconsequential	Representative's Address	
Justification(s)	1. Hardship	Representative's Phone #	
Justification(s)	Additional Justification	Representative's Email	
Reasoning If not enough room, additional written information may be submitted	Requesting a variance for the rear sf amount allowed on the lot. Currently with the existing house and carport, the rear sf is 1062 sf and allowed is 907.5 (this variance was approved on Oct. 10, 2019). We would like to build an addition (345 sf) to the existing house that would increase the rear sf by 112 sf, bringing the new rear sf to 1174 sf (3. Nominal and inconsequential). Due to the east/west orientation of the lot the rear sf is a (1.Hardship).		

Date 5-7-2020 **Signature**

Updated 02.18.20

Kevin Dewlen
806 W. Mulberry St.
Fort Collins, CO 80521

5/12/2020

Attn: Zoning
Community Development & Neighborhood Services
281 N. College Ave
Fort Collins, CO 80524

To Whom It May Concern:

Thank you for the time to look at the variance request for the addition at 806 W Mulberry St.

We are requesting a variance for the allowed sf on the rear of the lot. Currently with the existing house and carport the rear sf total is 1062 sf and allowed is 907.5 sf (this variance was approved on Oct 10, 2019; Appeal ZBA 190039). We would like to build and addition to the existing house (345sf in total) that would increase the **rear sf by an additional 112 sf (Justification # 3 nominal and inconsequential).** Due to the east/west orientation of the lot, with the front of the house facing Mulberry, the shallow lot makes it difficult to meet the requirements of front/rear sf allowances. **(Justification #1 Hardship)**

We are meeting all other setback requirements and placing as much of the addition on the front half of the lot to help meet the allowed sf requirements. Thank you for your time and consideration of this variance request.

Thank you and be well,

Sincerely,

Kevin Dewlen

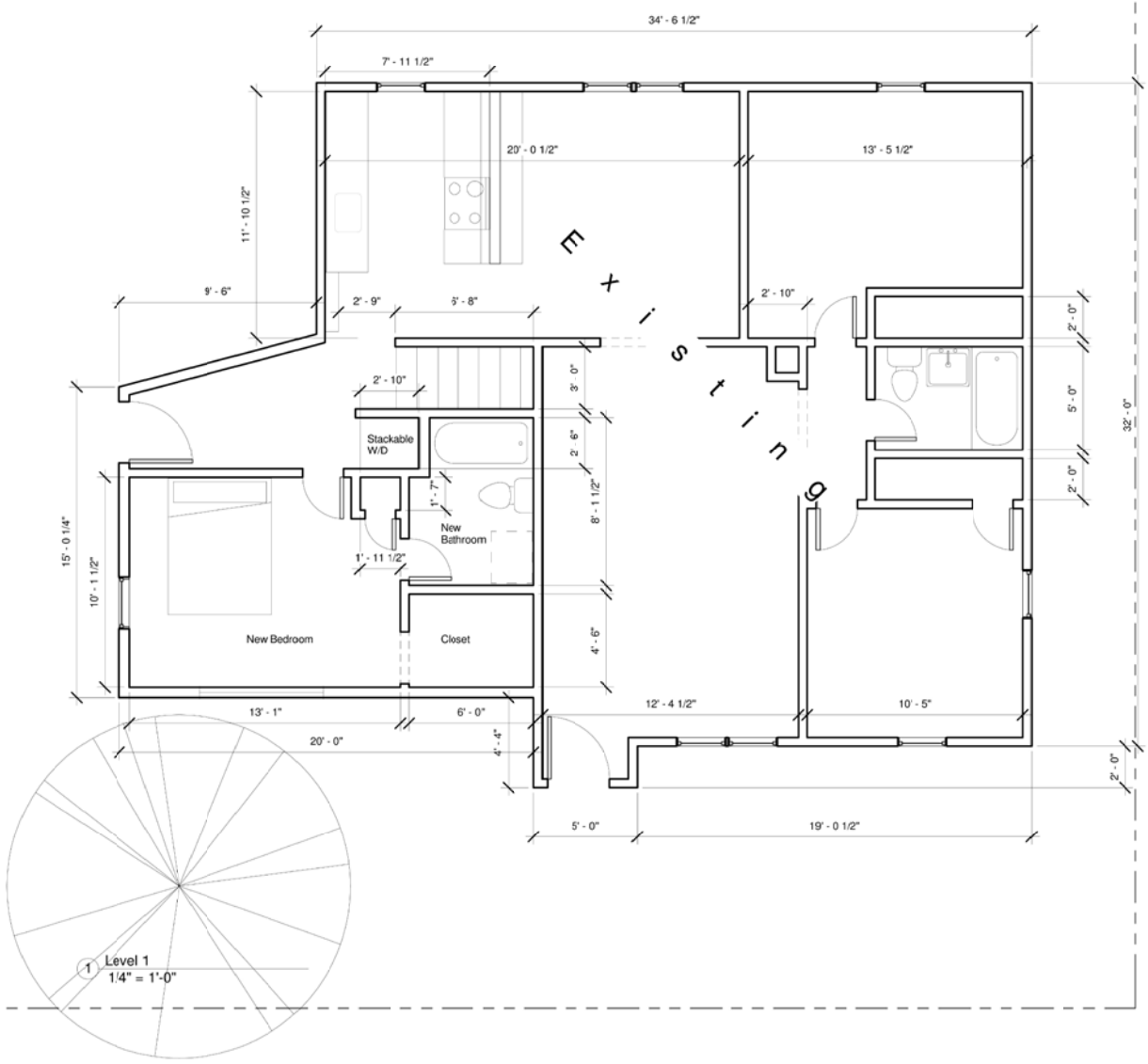

No.	Description	Date

806 W Mulberry
House Addition
Floor plan

Project number	806-1
Date	1-3--20
Drawn by	KD
Checked by	KD

A1

Scale	1/4" = 1'-0"

5/7/2020 1:58:43 PM

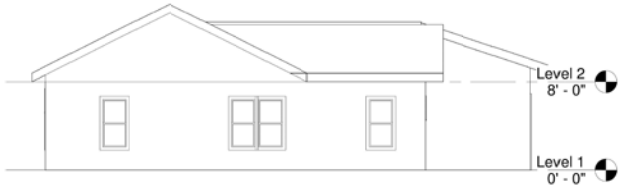

1 North
1/8" = 1'-0"

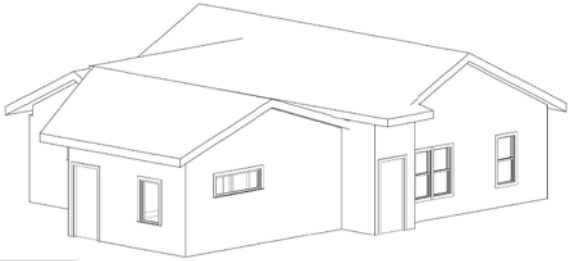

5 {3D}

2 East
1/8" = 1'-0"

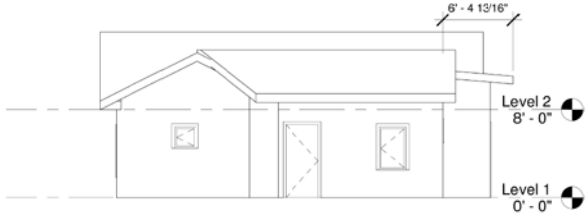

4 West
1/8" = 1'-0"

3 South
1/8" = 1'-0"

No.	Description	Date

806 W Mulberry
House Addition
3D & Elevations

Project number	806-1
Date	1-3--20
Drawn by	Author
Checked by	Checker

A2

Scale	1/8" = 1'-0"

5/7/2020 2:05:08 PM

806 West Mulberry St.
Lot 13
Block 287
Loomis Addition

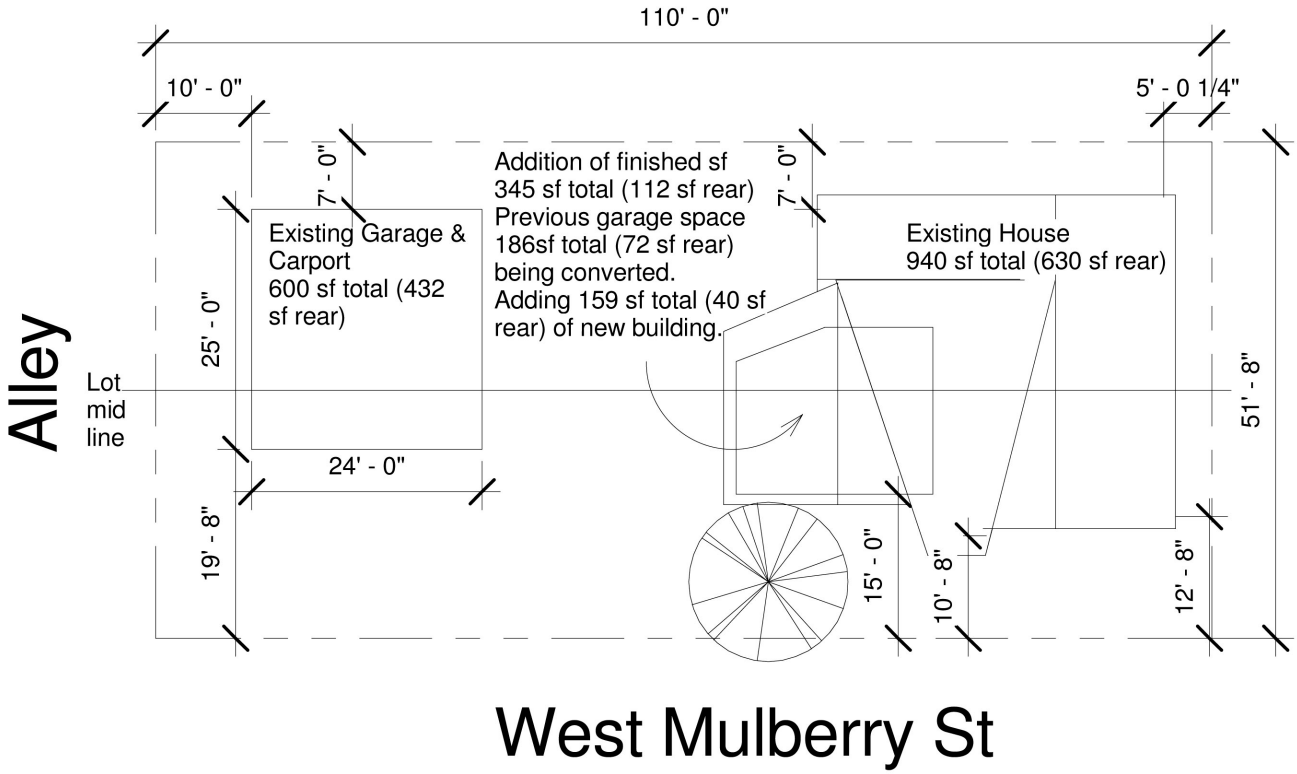

1 Site
1" = 20'-0"

	806 W Mulberry House Addition	House Addition	
		Project number 806-1	Site
		Date 1-3--20	
		Drawn by KD	
		Checked by KD	Scale 1" = 20'-0"

Application Request
for Variance from the Land Use Code

The Zoning Board of Appeals has been granted the authority to approve variances from the requirements of Articles 3 and 4 of the Land Use Code. The Zoning Board of Appeals shall not authorize any use in a zoning district other than those uses which are specifically permitted in the zoning district. The Board may grant variances where it finds that the modification of the standard **would not be detrimental to the public good**. Additionally, the variance request must meet at least one of the following justification reasons:

(1) by reason of exceptional physical conditions or other extraordinary and exceptional situations unique to the property, including, but not limited to physical conditions such as exceptional narrowness, shallowness, or topography, the strict application of the code requirements would result in unusual and exceptional practical difficulties or undue hardship upon the occupant/applicant of the property, provided that such difficulties or **hardship** are not caused by an act or omission of the occupant/applicant (i.e. not self-imposed);

(2) the proposal will promote the general purpose of the standard for which the variance is requested **equally well or better than** would a proposal which complies with the standard for which the variance is requested;

(3) the proposal will not diverge from the Land Use Code standards except in a **nominal, inconsequential way** when considered in the context of the neighborhood.

This application is only for a variance to the Land Use Code. Building Code requirements will be determined and reviewed by the Building Department separately. When a building or sign permit is required for any work for which a variance has been granted, the permit must be obtained within 6 months of the date that the variance was granted.

However, for good cause shown by the applicant, the Zoning Board of Appeals may consider a one-time 6 month extension if reasonable and necessary under the facts and circumstances of the case. An extension request must be submitted before 6 months from the date that the variance was granted has lapsed.

Petitioner or Petitioner's Representative must be present at the meeting

Location: 300 LaPorte Ave, Council Chambers, Fort Collins, CO 80524

Date: Second Thursday of the month Time: 8:30 a.m.

Variance Address	2524 W. Plum St.	**Petitioner's Name, if not the Owner**	
City	Fort Collins, CO	**Petitioner's Relationship to the Owner is**	
Zip Code	80521	**Petitioner's Address**	
Owner's Name	Adam Musielewicz	**Petitioner's Phone #**	
Code Section(s)	Division 4.4 (B)	**Petitioner's Email**	
Zoning District	Low density residential	**Additional Representative's Name**	Laurel Carter
Justification(s)	3. Nominal and inconsequential	**Representative's Address**	2524 W. Plum St.
Justification(s)	1. Hardship	**Representative's Phone #**	517-902-1188
Justification(s)	Additional Justification	**Representative's Email**	a_musielewicz@hotmail.com
Reasoning If not enough room, additional written information may be submitted	We would like to erect a 14ft diameter yurt in our backyard (please refer to written statement regarding intent). Our plot allows for the best location of the structure to be located in the NW corner of the property as there is an open area to accommodate the yurt. Other potential locations are rendered impractical due to the existence of either large trees stumps (of trees that needed to be cut due to disease) or too close in proximity to our house. We are requesting an exemption from the 15ft set back on the North and West side of the property, respectively to 5ft		

Date 5/12/2020 **Signature**

Updated 02.18.20

Written statement explaining reason for requesting variance:

We would like to erect at 14’ diameter yurt (155sq ft and 9’9” tall) in our backyard. This additional space will allow us to complete our at-home work requirements, as well as provide supplementary recreational space for our two boys, ages 11 and 2. One parent is working full time from home and with COVID-19 regulations the other parent is in growing need of this private office space. The yurt will be used for several uses: primary home office for both working parents, children’s playhouse, and yoga/meditation space. We feel that 14’ is of adequate size to accommodate these uses without dominating the yard or impending neighboring views.

The best location in our yard is in the Northwest corner of the plot. In this section of the yard there is enough openness to accommodate the space without running into impractical options found at other locations in the yard. For instance, on the due west side of the house, there is a large stump (circled in yellow in the attachment - *Google Earth Screenshot 2524 W. Plum St*.) that prevents use in this area. Several trees on the property became diseased and unfortunately had to be cut down prior to our ownership of the property. Other locations such as directly behind the house, are too close in proximity to the house itself. Simply, there are no other practical spaces to erect a yurt without either infringing upon existing set-backs or creating potential safety hazards in close proximity to our house.

We are writing to request then locating the yurt in the Northwest corner of the property, requesting an exemption from the 15ft set-back on the Westside of the property (to 10ft) as well as the 15ft set-back on the Northside of the property (to 5ft). Please see attachments: *Proposed Yurt Location - Northside Set-Back Request* and *Proposed Yurt Location - Westside Set-Back Request* for reference. As a consideration, the neighboring property to the north has several large pine trees (30ft high or so), that provide ample privacy between the lots.

Thank you for your consideration of this request.

Sincerely,

Adam Musielewicz
2524 W. Plum St.

PLAT OF THE
OVERLAND SUBDIVISION

SITUATE IN THE NORTH 1/2 OF SECTION 16, TOWNSHIP 7 NORTH, RANGE 69 WEST OF THE SIXTH P.M., CITY OF FORT COLLINS, COUNTY OF LARIMER, STATE OF COLORADO

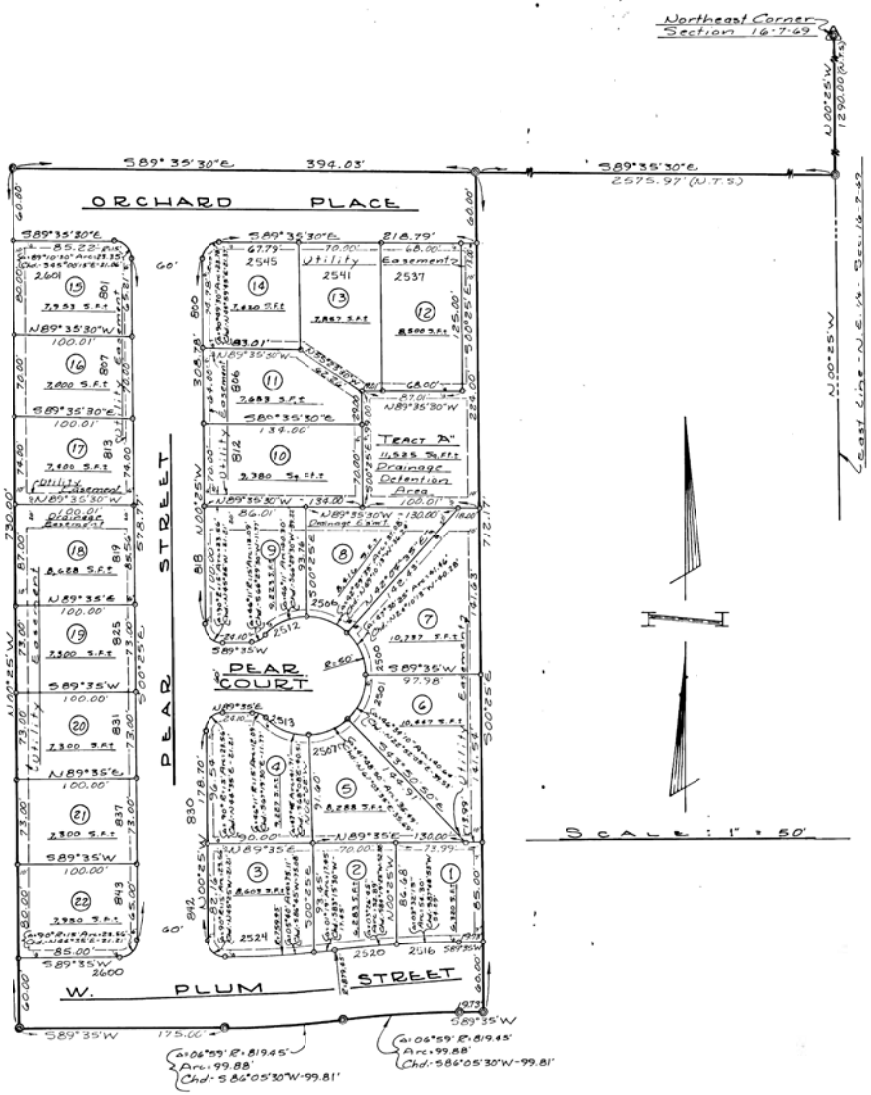

STATEMENT OF OWNERSHIP, SUBDIVISION, DEDICATION, AND DECLARATION OF PROTECTIVE COVENANTS:

KNOW ALL MEN BY THESE PRESENTS: That the undersigned, being the owner of the following described land, to-wit; A tract of land situate in the North 1/2 of Section 16, Township 7 North, Range 69 West of the Sixth P.M., City of Fort Collins, County of Larimer, State of Colorado, which, considering the East line of the Northeast 1/4 of said Section 16 as bearing N00°25'W and with all bearings contained herein relative thereto, is contained within the boundary lines which begin at a point, which bears S00°25'E 1290.00 feet and again N89°35'30"W 2575.97 feet from the Northeast corner of said Section 16 and run thence S00°25'E 712.17 feet; thence S89°35'W 19.73 feet; thence along the arc of a 819.45 foot radius curve to the left a distance of 99.88 feet, the long chord of which bears S86°05'30"W 99.81 feet; thence along the arc of a 819.45 foot radius curve to the right a distance of 99.88 feet, the long chord of which bears S86°05'30"W 99.81 feet; thence S89°35'W 175.00 feet; thence N00°25'W 730.00 feet; thence S89°35'30"E 394.03 feet to the point of beginning, containing 6.5437 acres, more or less, has caused the same to be surveyed and subdivided into lots, a tract, and streets as shown on this plat to be known as the OVERLAND SUBDIVISION, and does hereby dedicate and convey to and for public use, forever hereafter, the streets and easements as are laid out and designated on this plat.

PROTECTIVE COVENANTS for the Overland Subdivision are as filed contemporaneously herewith in the office of the Clerk and Recorder of Larimer County, Colorado.

WITNESS our hands and seals this 16th day of July A.D. 1976.

Richard L. Bartlett
Richard L. Bartlett

State of Colorado } ss:
County of Larimer }
The foregoing instrument was acknowledged before me this 16th day of July A.D. 1976.

Kimberly E. Beckman
Notary Public

My notarial commission expires May 2, 1978

ENGINEER'S CERTIFICATE:

Richard A. Rutherford, a Professional Engineer and Land Surveyor under the laws of the State of Colorado, being duly sworn on his oath, deposes and says, that the survey and plat of the Overland Subdivision were made under his supervision, that said plat is an accurate delineation of said survey, that he has read the statements thereon, and that the same are true of his own knowledge.

Richard A. Rutherford
Richard A. Rutherford
Professional Engineer & Land Surveyor

Subscribed and sworn to before me this 16th day of July A.D. 1976.

Kimberly E. Beckman
Notary Public

My notarial commission expires May 2, 1978

APPROVED:

By the Planning and Zoning Board of Fort Collins, Colorado, on this 10th day of May, A.D. 1976.

Paul A. Seibel
Secretary

APPROVED:

By the City Council of the City of Fort Collins, Colorado, on this 20th day of July A.D. 1976.

Verna Lewis
City Clerk

NOTE:
Drainage easement as laid out and designated on this plat, shall be for the installation and maintenance of a drainage ditch. The design and construction of said ditch shall be subject to the inspection and approval of the City Engineer. All improvements relating to drainage shall be adequate to handle the storm runoff terminating at the property in question. The area in the drainage easement in each lot and all drainage improvements in it shall be constructed by the owner of the lot. Within this easement, no structure, planting, fence, or other material shall be placed or permitted to remain, which may interfere with the installation and maintenance of drainage facilities, or which may change the direction of flow of drainage channels in the easements, or which may obstruct or retard the flow of water through drainage channels in the easement.

This unofficial copy was downloaded on May-08-2020 from the City of Fort Collins Public Records Website: http://citydocs.fcgov.com
For additional information or an official copy, please contact Engineering Office 281 North College Fort Collins, CO 80521 -TSA

Adam Musielewicz - Outlook We | Mail - Adam Musielewicz - Outlo | zoning-variance-guidelines.pdf | 2524 W Plum St - Google Maps | How Do I Take a Screen Shot of
google.com/maps/place/2524+W+Plum+St,+Fort+Collins,+CO+80521/@40.5768607,-105.1250838,21z/data=!4m5!3m4!1s0x87694a20bda7ca8b:0x6990b9115cfde94a!8m2!3d40.5768607!4...
Sign in

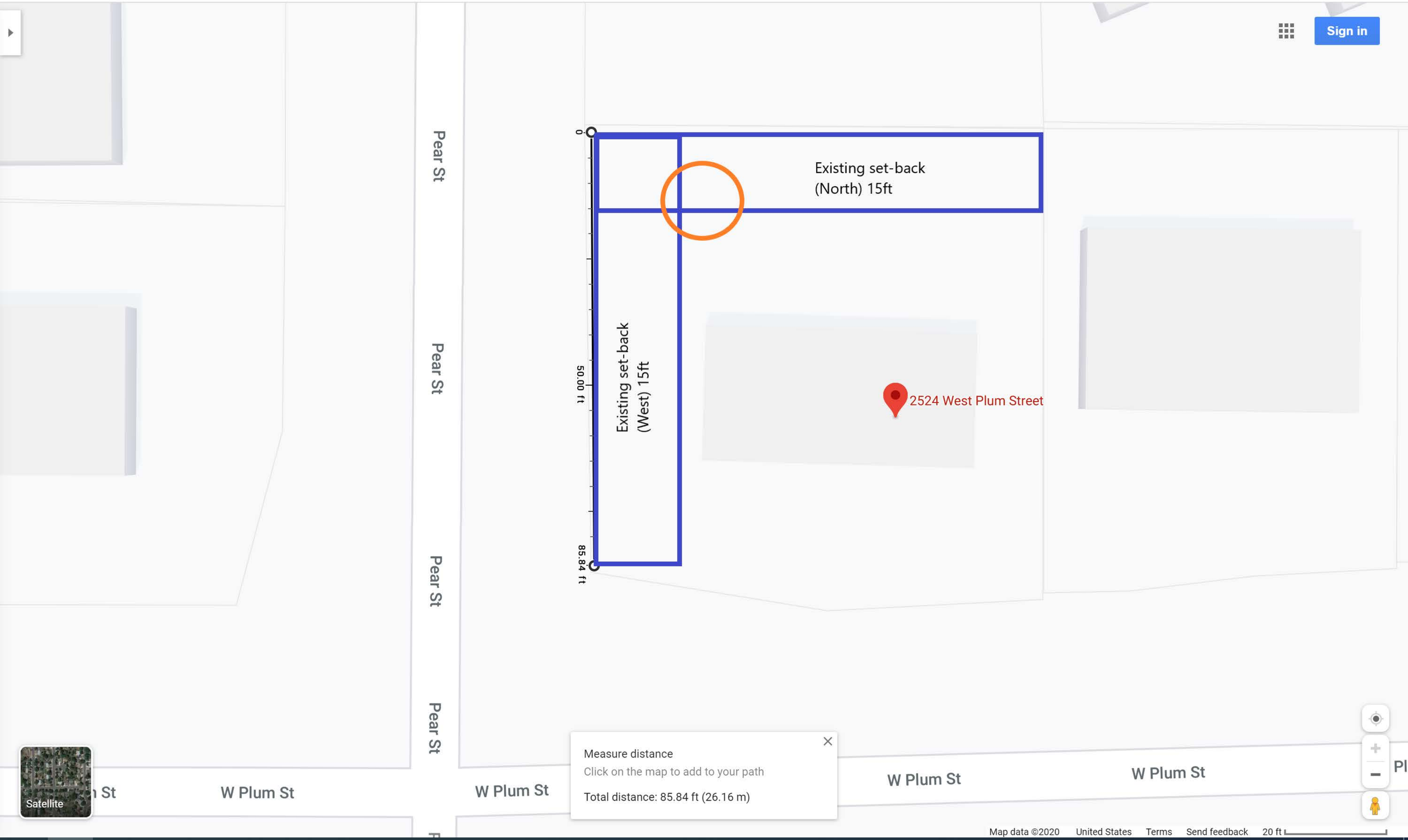

1:52 PM
5/8/2020

Adam Musielewicz - Outlook We | Mail - Adam Musielewicz - Outlo | zoning-variance-guidelines.pdf | 2524 W Plum St - Google Maps | How Do I Take a Screen Shot of
google.com/maps/place/2524+W+Plum+St,+Fort+Collins,+CO+80521/@40.5768607,-105.1250838,21z/data=!4m5!3m4!1s0x87694a20bda7ca8b:0x6990b9115cfde94a!8m2!3d40.5768607!4...
Sign in

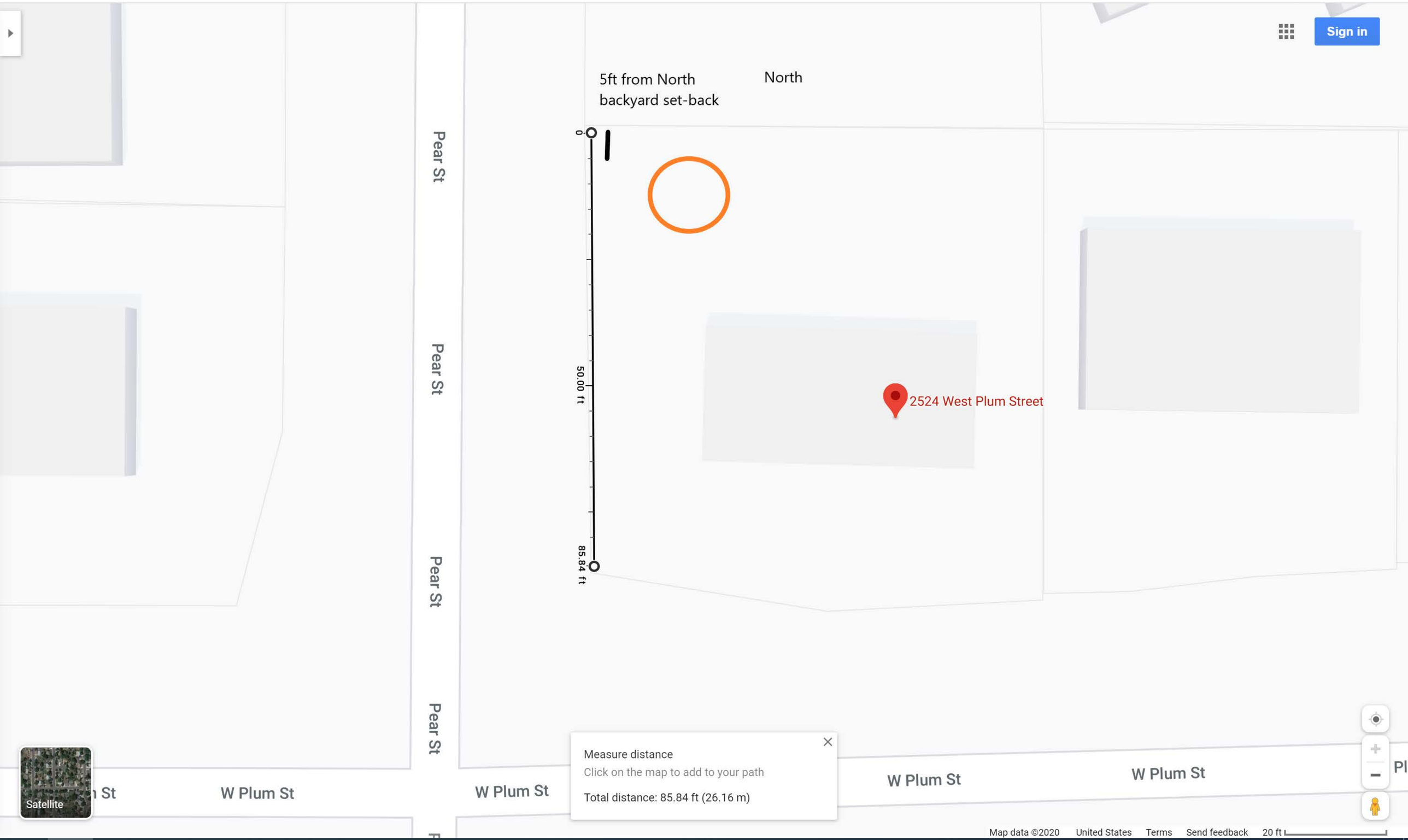

1:52 PM
5/8/2020

Adam Musielewicz - Outlook We | Mail - Adam Musielewicz - Outlo | zoning-variance-guidelines.pdf | 2524 W Plum St - Google Maps | How Do I Take a Screen Shot of
google.com/maps/place/2524+W+Plum+St,+Fort+Collins,+CO+80521/@40.5768607,-105.1250838,21z/data=!4m5!3m4!1s0x87694a20bda7ca8b:0x6990b9115cfde94a!8m2!3d40.5768607!4...
Sign in

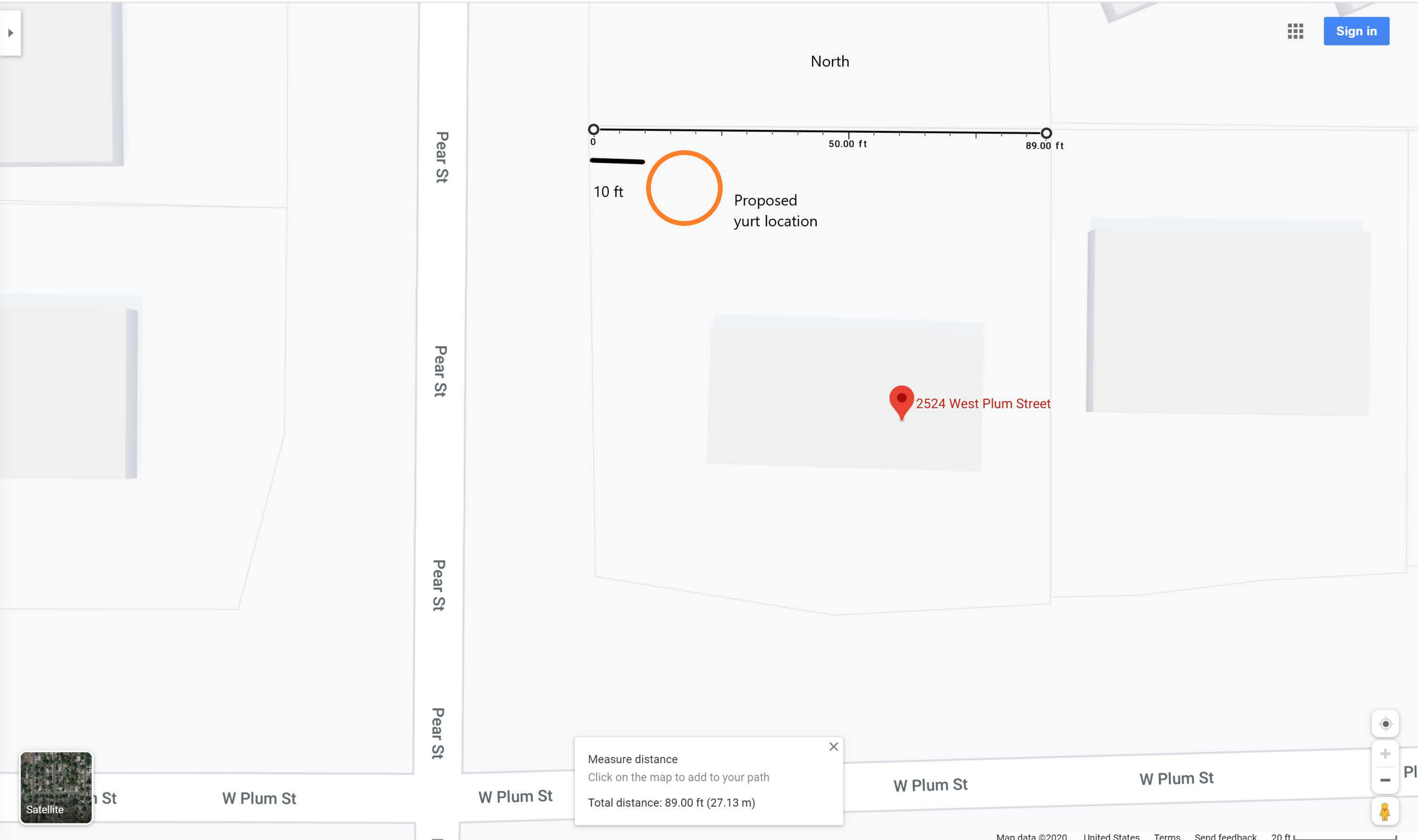

1:38 PM
5/8/2020

Adam Musielewicz - Outlook We | Mail - Adam Musielewicz - Outlo | zoning-variance-guidelines.pdf | 2524 W Plum St - Google Maps | How Do I Take a Screen Shot of

google.com/maps/place/2524+W+Plum+St,+Fort+Collins,+CO+80521/@40.5768607,-105.1250838,50m/data=!3m1!1e3!4m5!3m4!1s0x87694a20bda7ca8b:0x6990b9115cfde94a!8m2!3d40....

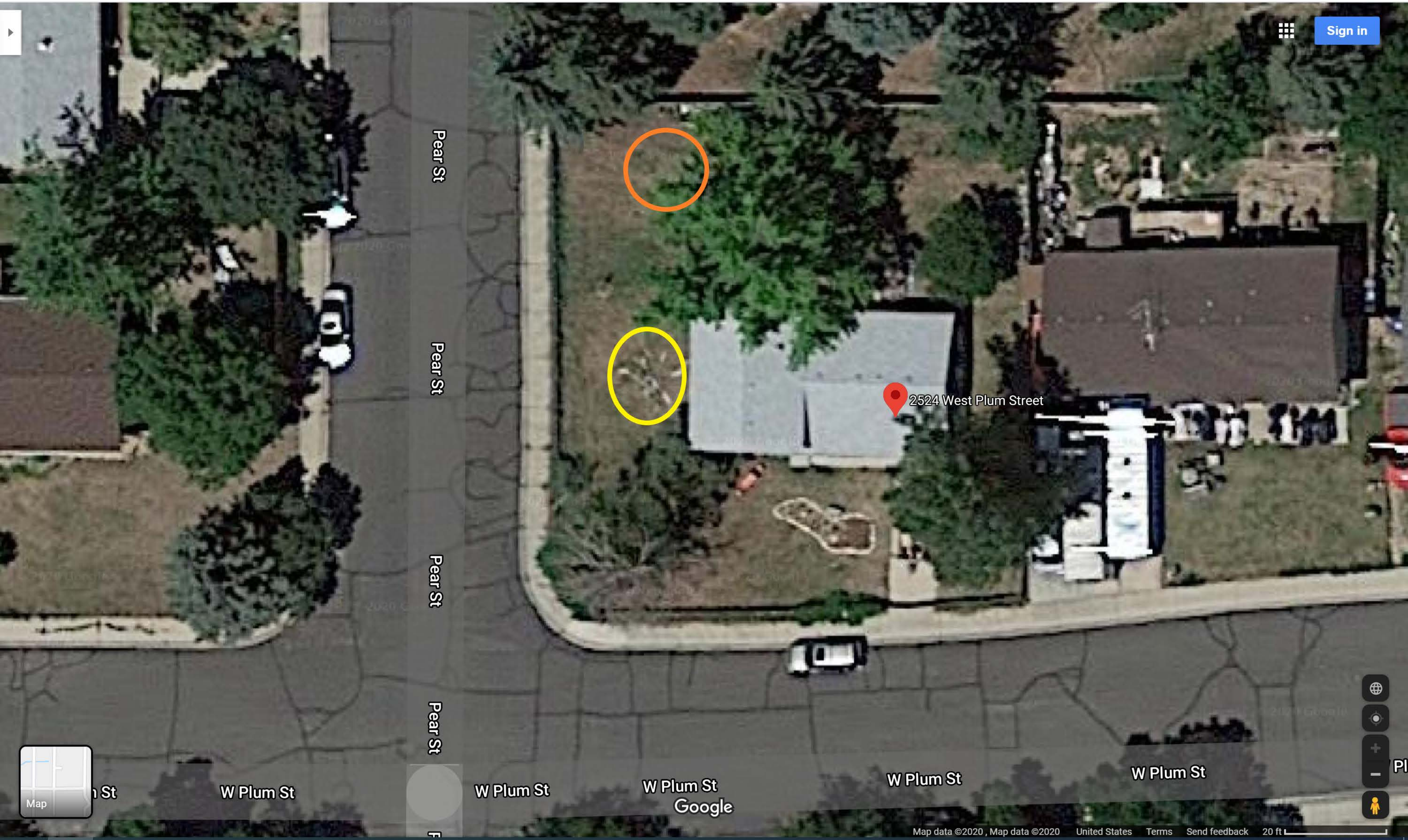

1:25 PM
5/8/2020

Visit us at www.yurts.com

Design and price your yurt with **Yurt Builder 3D™**

Pricing and Order Booklet

From tropical getaways to Alpine retreats, Pacific Yurts sets the highest standard for successfully adapting a legendary shelter into a modern, flexible, environmentally friendly living structure. Simply put, ***no one knows yurts like Pacific Yurts.*** *As the original designer and manufacturer of the modern yurt, we have built an over 40-year track record of success and innovation. Our thousands of satisfied customers on nearly every continent are testament to our expertise, proven product performance and commitment to outstanding service.*

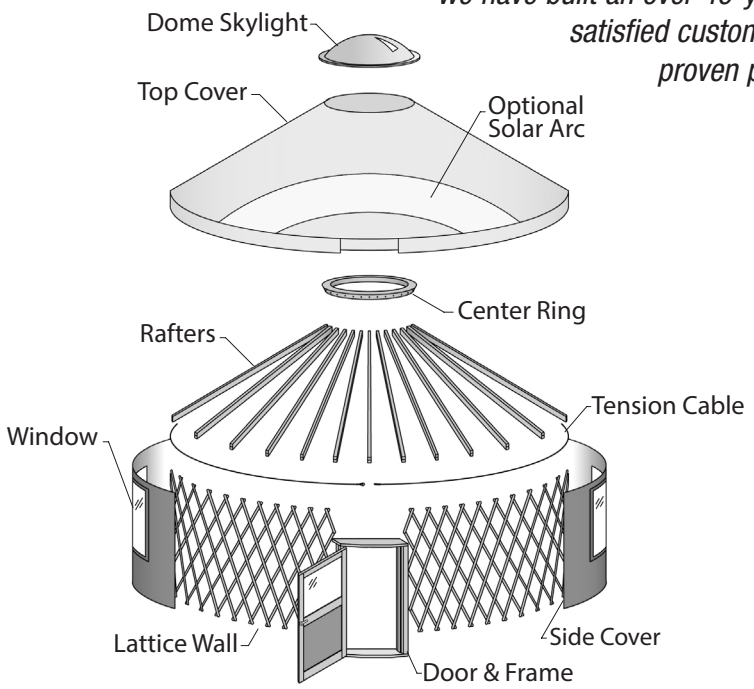

SIZES AVAILABLE

Size (Diameter)	Sq. Ft.	Height At Center	Approx. Base Shipping Weight	Base Price
12'	115	9'	850 lb	$5,825
14'	155	9'9"	900 lb	$6,520
16'	200	10'3"	1,000 lb	$7,025
20'	314	11'	1,350 lb	$8,700
24'	452	12'6"	1,700 lb	$9,965
30'	706	14'2"	2,300 lb	$12,350

*Platform/Floor not included.

OPTIONS See order form on next page

TERMS

- 50% MINIMUM DEPOSIT required with your order; balance upon notification that your yurt is ready for shipment.
- VISA/MASTERCARD/DISCOVER/AMEX/WIRE TRANSFER accepted.
- 20% restock charge on canceled invoice total.
- All prices are subject to change without notice.
- Sales Tax applies where required by law.

STANDARD FEATURES - ALL MODELS

LATTICE WALL: Expandable, clear, kiln dried, Douglas fir lath. Finished with a wood penetrating oil: assembled with aluminum rivets. Finished height is approx. 7'.

RAFTERS: High quality, structural grade Douglas fir, sanded and finished with a wood penetrating oil: includes hardened steel pins which fit into holes in center ring.

CENTER RING: Beautiful laminated Douglas fir compression ring finished with a wood penetrating oil: through-bolted for additional strength.

DOOR & FRAME: Beautiful solid wood door with window and inset wood panel, comes pre-hung and includes weather stripping. Solid brass hinges with bronze finish and quality lockset with lifetime warranty.

DOME: Durable, low maintenance, clear acrylic dome. Optional opener available for extra ventilation.

TENSION CABLE: 1/4" aircraft quality galvanized steel, 7,000 lb. breaking strength for 20', 24' and 30' yurts; 3/16" with 4,200 lb. breaking strength for 12', 14' and 16' yurts.

WINDOWS: Two large fabric windows (54"x45"). Clear vinyl, framed in 2" marine grade velcro. Windows open from outside. Includes zippered weather flaps and sewn-in screens.

TOP COVER: This flame retardant vinyl-laminate provides excellent durability, low maintenance and protection from the elements and includes a 10 year warranty. Overhead seams are electronically bonded together instead of being machine sewn and are impervious to moisture. Our optional premium top cover includes a 15 year warranty. Rain diverter included over every door.

SIDE COVER: Side cover is an acrylic coated 100% polyester fabric that provides exceptional strength, durability and low maintenance; easy clip-on design.

DETAILED INSTRUCTIONS for setting up. Suggested platform construction plans included.

Pacific Yurts Inc. • 77456 Hwy. 99 • Cottage Grove, OR 97424
541.942.9435 • 1.800.944.0240 • Fax 541.942.0508 • info@yurts.com • www.yurts.com

Patented
All rights reserved

PACIFIC YURTS ORDER FORM

Name & Address _____ Ship To _____

_____ _____

_____ _____

Phone & E-mail _____ Phone _____

YURT DIAMETER	❑ 12'- $5,825 ❑ 14'- $6,520 ❑ 16'- $7,025 ❑ 20'- $8,700 ❑ 24'- $9,965 ❑ 30'- $12,350	
SIDE COVER	**Color** ❑ Dark Linen ❑ Forest Green ❑ Terra Cotta ❑ Olive ❑ Other _____	
WINDOWS – *includes two Fabric Windows at no charge*	Additional Fabric Windows _____ x $150 Each *UV Web Frames _____ x $50 Each*	
	Window Awning Frame _____ x $175 Each *Not available on 12' & 14' models*	
Additional crating fee for Glass Windows (see below)	**Glass Window System** _____ x $1,035 Each *Not available on 12' & 14' models* Exterior Trim Color ❑ Tan ❑ White ❑ Bronze	
TOP COVER – *includes a Rain Diverter over every door*	**Premium Top Cover** ❑ Tan ❑ White ❑ Gray ❑ Dark Gray ❑ 12' - $350 ❑ 14' - $365 ❑ 16' - $415 ❑ 20' - $555 ❑ 24' - $630 ❑ 30' - $895	
(Choose Putty or Olive)	**Door Awning** $150 Each ❑ 6 o'clock ❑ 3 o'clock ❑ 9 o'clock ❑ 12 o'clock	
❑ Putty Valance	**Solar Arc** ❑ 6 o'clock ❑ 3 o'clock ❑ 9 o'clock ❑ 12 o'clock ❑ 14' - $340 ❑ 16' - $390 ❑ 20' - $440 ❑ 24' - $490 ❑ 30' - $540	
❑ Olive Valance ❑ Brown Valance	**Water Catchment** ❑ 14' - $395 ❑ 16' - $410 ❑ 20' - $490 ❑ 24' - $570 ❑ 30' - $650	
❑ Other	**Perimeter Gutter System** ❑ White ❑ Brown ❑ 12' - $355 ❑ 14' - $410 ❑ 16' - $495 ❑ 20' - $660 ❑ 24' - $775 ❑ 30' - $955	
ROOF INSULATION	❑ 12' - $395 ❑ 14' - $475 ❑ 16' - $625 ❑ 20' - $860 ❑ 24' - $1,220 ❑ 30' - $1,745	
WALL INSULATION	❑ 12' - $740 ❑ 14' - $810 ❑ 16' - $865 ❑ 20' - $1,035 ❑ 24' - $1,240 ❑ 30' - $1,605	
INSULATED WINDOW COVERS	_____ x $40 Each	
DOOR	❑ Window ❑ Panel ❑ Double Window - $100 ❑ French - $420 ❑ Fiberglass - $460 ❑ French Fiberglass - $1,150	
❑ Inward Opening ❑ Outward Opening	**Additional Door & Frame** ❑ 3 o'clock ❑ 9 o'clock ❑ 12 o'clock ❑ Window - $825 ❑ Panel - $825 ❑ Double Window - $925 ❑ French - $1,245 ❑ Fiberglass - $1,185 ❑ French Fiberglass - $1,875	
Handle on: ❑ Left ❑ Right (*from Exterior*)	**Screen Door** ❑ Std. - $340 ❑ French - $375 *Upgrade hardware _____ x $70 Each*	
	Door Screen Curtain ❑ Std. ❑ French - $50	
	Deadbolt ❑ With Locking Lever ❑ With Passage Lever - $60 ❑ Keypad Deadbolt - $140	
SNOW & WIND OPTIONS	**Snow & Wind Kit - Standard Hardware** ❑ 12' or 14' - $420 ❑ 16' - $495 ❑ 20' - $660 ❑ 24' - $790 ❑ 30' - $940	
(Recommended on 24' & 30' models)	**Snow & Wind Kit - Stainless Steel Hardware** *Not available with 2x6 Upgrade or Alpine Package* ❑ 12' or 14' - $520 ❑ 16' - $620 ❑ 20' - $820 ❑ 24' - $985 ❑ 30' - $1,170	
	Perimeter Blocking *(2x4 blocking between studs)* Available only with Snow & Wind Kit ❑ 12' - $75 ❑ 14' - $90 ❑ 16' - $105 ❑ 20' - $135 ❑ 24' - $150 ❑ 30' - $180	
Upgrades in this section are available only with the Snow & Wind Kit.	**2x6 Rafter/Ring/Hardware Upgrade** *Available only on the 20', 24' and 30'* ❑ 20' - $700 ❑ 24' - $900 ❑ 30' - $1,100 ❑ **Central Column** - $1,215	
	Alpine Package (*30' size only*) Includes upgrades to: ring, rafters, door header, hardware & Central Column ❑ 30' - $9,390	
DOME OPTIONS	**Tinted Dome** ❑ $200 **Dome Opener** ❑ $165	
	Center Ring Insert ❑ Bug Screen ❑ Shade Screen - $150	
	Dome Screen ❑ Bug Screen ❑ Shade Screen - $60	
	Fan Support ❑ $65 *Not recommended with Center Ring Insert*	
STOVE FLASHING	❑ $65 - Std. 8" opening ❑ Other size _____	
PACKING & CRATING	**Yurt Crating** ❑ US & Canada - $400 ❑ International - $475	
Freight charges are not included	**Glass Window System** 1-8 Windows ❑ US & Canada - $150 ❑ International - $200	

CC# _____

exp date:_____ CVC _____ Same card for final payment?_____

Card name & billing address: _____

TOTAL Sales Tax applies where required by law.	
50% DEPOSIT =	

PACIFIC YURT OPTIONS

WINDOW AND DOOR PLACEMENT

The diagram below (using a clock face) represents a door at 6:00. You can choose your own placement or choose from the following placements.

Restrictions on placement: Windows must be placed 18" minimum from doors and 15" minimum from windows. Doors must be placed at quarter hour locations only.

- ❏ 2 window placement: 8:00 and 4:00
- ❏ 3 window placement: 8:00 and 12:00 and 4:00
- ❏ 4 window placement: 7:30, 10:30, 1:30 and 4:30
- ❏ 5 window placement: 8:00, 10:00, 12:00, 2:00 and 4:00
- ❏ _____ total windows: Evenly spaced

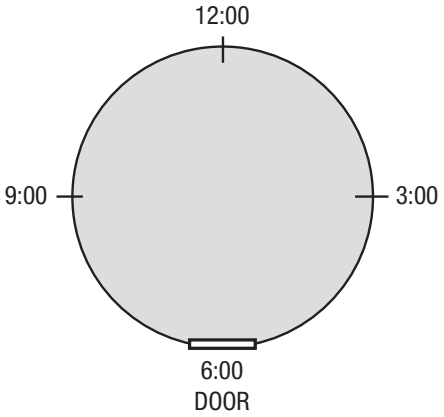

DOOR HANDLE PLACEMENT

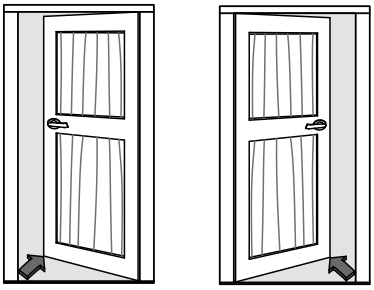

Handle on Left (from Exterior) — Handle on Right (from Exterior)

FABRIC WINDOW – SIZE OPTIONS

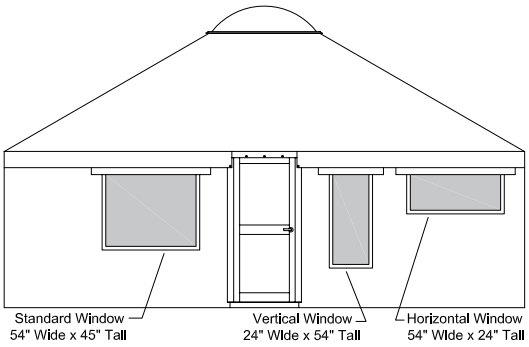

OPTION DESCRIPTION

Additional Fabric Windows
Windows can be added to provide additional light and ventilation. They are made of clear vinyl, framed in 2" marine grade velcro and include zippered weather flaps and sewn-in screens. Windows open from outside.

Window Awning Frame
Frame consists of an anodized aluminum framework to support the window flap. This creates an overhang allowing the windows to be left open for ventilation.

Glass Window System
Energy efficient glass window (48" wide x 39" tall) with fabric flange and curved wood frame, opens from inside. Includes trim kit. Not available on 12' and 14' models. Requires additional packing and crating charge.

Premium Top Cover
Made of the highest quality roofing material, with a 15 year material manufacturer's warranty, this top is available in tan, white, gray or dark gray. Not for use with the solar arc.

Door Awning
This 5' x 6' piece of roofing fabric is welded over the door and has grommets installed along the three outer edges. When supported by a wood frame (not included), it provides a covered porch. Additional sizes are available.

Solar Arc
The solar arc is translucent vinyl roofing fabric integrated into the top cover in an arc shape that allows diffused light into the yurt (see photo in brochure). This option is not recommended for hot unshaded locations or where full insulation is required. It is available on the standard top cover only.

Water Catchment
The water catchment is a fabric gutter system which collects water run-off from the top cover and funnels it through downspouts into a storage tank. (Storage tank not included.) One downspout is included with the 14' and 16' yurts; 20', 24' and 30' yurts include two downspouts. (For non-potable water use.)

Perimeter Gutter System
Similar function to Water Catchment but utilizes rigid PVC and can be retrofit. Comes in approximate 6' sections. On site assembly required. Available in brown or white.

continued on back page

ABOUT SHIPPING

List prices are FOB - Cottage Grove, Oregon. The National Motor Freight Classification for Yurts is: KD Houses or Buildings NOI - Wood, Item No. 38470 - Sub 2, Class 150. We suggest you call our office for additional shipping information.

FOR DOMESTIC SHIPMENTS -
We generally ship **freight collect**. Shipping weights include approximately 200 lb per yurt for packing materials and crates. There is a packing and crating fee of $400 per yurt unless you pick it up at our shop. (Glass Windows - add'l charge)

FOR INTERNATIONAL CUSTOMERS -
CIF or other routing quotations will be provided upon request. Packing and crating fees for international ocean freight are $475 per yurt. Please check with your Customs Agent for further information. (Glass Windows - add'l charge)

PACIFIC YURT OPTIONS (continued)

Insulation
Our seven layer reflective insulation is covered with an attractive fabric liner facing. Custom designed to match your window and door placement. It works by reflecting radiant heat in both directions, keeping the yurt warmer in the winter and cooler in the summer.

Insulated Window Covers
These covers are made of reflective insulation with a fabric liner facing to match the interior insulation. These covers will insulate your windows during the coldest times of the year and are easy to install and remove.

Window Door
Our standard door features a large window (acrylic) for added light. **Panel Door** also available with inset wood panels in the top and bottom, or choose a **Double Window Door** with acrylic windows in the top and bottom panels.

French Doors
French doors are double doors with the levers in the middle which provide more light, view and a wider opening. Available in wood or fiberglass on 16' or larger yurts.

Fiberglass Door
Ultra-durable insulated door with large double glazed window. Ideal for low maintenance requirements in the harshest environments.

Additional Door & Frame
Add a back or side entrance for easy access to decks, hot tub, etc. Available on 16' or larger yurts.

Screen Door
Beautiful solid wood screen door with self-closing hinges provides extra ventilation while keeping the bugs out.

Upgrade Hardware for Screen Door
This option upgrades the standard spring-loaded steel screen door hinges to solid brass butt hinges with bronze finish. Also included is a pneumatic door closer.

Door Screen Curtain
This screen attaches to the top of the door frame, is weighted at the bottom and overlaps in the middle for easy access. Works best with outward-opening door.

Snow & Wind Kit
The snow and wind kit consists of a vertical stud under every rafter that is secured to the rafter, lattice wall and floor. In addition, there is a cable blocking system in the rafters. This kit not only adds rigidity, but provides shear to prevent torque. Recommended for high snow and wind conditions. Stainless steel hardware available.

Perimeter Blocking
Finished 8' 2x4's to be cut and installed between vertical supports to meet IBC standards. Includes screws. Available only with Snow and Wind Kit.

2x6 Rafter/Ring/Hardware Upgrade
This option upgrades the standard rafters, center ring and hardware for increased snow load capacity. Available only with Snow and Wind Kit.

Central Column
Powder coated steel column increases snow load capacity. Available only with Snow and Wind Kit and 2x6 Rafter Upgrade.

Alpine Package
This package includes upgrades to the center ring, rafters, door header, hardware and steel central column. Engineered for heavy snow loads encountered at ski resorts. Available only on the 30' model.

Tinted Dome
The tinted dome blocks approximately 60% of the heat coming through the skylight, and only marginally affects the natural light. Keeps the yurt cooler in unshaded locations.

Dome Opener
Opens the dome skylight to allow the escape of hot air or moisture that may get trapped at the ceiling. This creates a natural convection cooling system for refreshing comfort. Includes extension handle.

Center Ring Insert
Finely crafted wood frame fits into the center ring and includes bug screen or shade screen.

Dome Screen
Circular hemmed screen attaches to the center ring. Choose bug or shade screen.

Fan Support
This sculpted wood support fits into the center ring and allows the installation of a ceiling fan for improved air circulation.

Stove Flashing
Double metal flashing made of galvanized sheet metal that is powder coated for corrosion resistance and beauty. Standard opening is 8" – other sizes are available.

ADDITIONAL OPTIONS AND PRICING

Banner System
Display custom graphics or logos on your yurt for commercial enterprises or to identify sponsors for special events. The removable 5' x 5' banner laces into a grommeted frame mounted on the roof. $455

Cable Tie-Down
The cable tie-down system attaches to the center ring in four locations and secures to a recessed eyebolt in the center of the floor. It can be installed and removed as needed for severe wind conditions. Designed to be used in conjunction with the Snow and Wind Kit as an additional level of protection. $185

Convenience Panel
Beautiful, multi-purpose panel to facilitate a variety of applications including glass window, A/C, hearth, electrical panel, etc. $725

Door Canopy
The door canopy is made of top quality vinyl fabric on a welded aluminum frame and provides a graceful covered entry to your yurt. Graphics and backlighting available. $985 to $1,285

Tropical Cupola
Designed for hot tropical environments, this powder-coated steel framework has an architectural fabric cover and replaces the dome skylight. It provides shade and creates a natural cooling system by allowing maximum air flow for refreshing comfort. $840 to $885

Vinyl Side Cover
This cover is made of durable vinyl-laminated fabric and includes two windows. ($200 each additional window.) $400 to $575

Other Options Available ...

"Your company has always been and continues to be a pleasure to work with. I am amazed at the quality of the product you produce and the efforts you go to satisfy your customers." – Kathryn L., Colorado

"I chose Pacific Yurts because of their reputation, dependability of the company and excellent customer service." – Laine S., Maine

Thank you for your interest in Pacific Yurts. We hope to soon welcome you to our family of satisfied customers. If you have any questions or need additional information, please call us at 1.800.944.0240.

12′, 14′ & 16′ Yurts

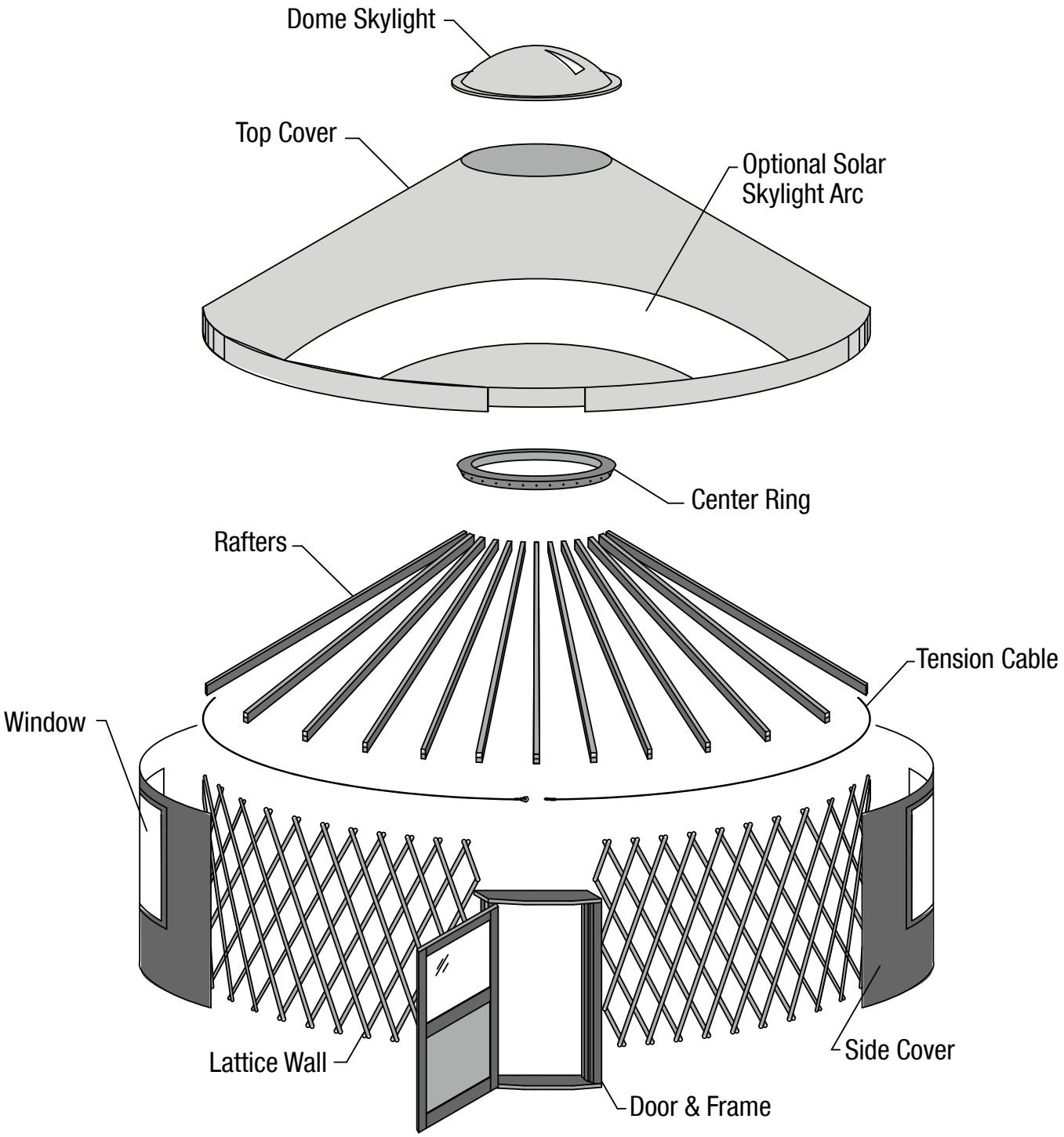

Artist's Conception

© Pacific Yurts Inc.

SET UP MANUAL

The original manufacturer of the modern lattice wall yurt, the highest quality for over 35 years.

Manufactured by Pacific Yurts Inc. • 77456 Hwy 99 S. • Cottage Grove, OR 97424 • (541) 942-9435 • www.yurts.com

Have you done these important things?

Please be sure you have done the following:

❑ The platform must be round and the same diameter as your yurt.

❑ The screw in the tip of each rafter should be installed to keep the rafter from lifting off the tension cable. ***(Page 8)***

❑ The rafters over the door should be secured to the door header with the brackets provided. ***(Page 8)***

❑ If the Snow & Wind Kit was purchased, screws need to be installed through the lattice wall into the back of each rafter support. ***(Page 12)***

❑ After making sure the gap is 1", be sure the cord in the grommet strip (under the valance) is securely tied to the last grommet on the top cover next to the door. ***(Page 24)***

❑ The gap between the side cover and grommet strip on the top cover needs to be a consistent 1" before securing the bottom of the side cover to the platform. ***(Page 24)***

❑ The cord that is laced through the grommets at the bottom of the top cover valance needs to be pulled **as tight as possible,** and secured at the door frame. ***(Page 28)***

❑ If the dome opener is purchased it is **extremely important** to make sure the opener spindle is installed correctly to avoid breaking the dome skylight. ***(Page 30)***

❑ When cleaning the dome skylight **DO NOT USE** glass cleaners! See care recommendations on ***page 48.***

❑ Remember that this manual includes a care and maintenance section that should be referred to periodically.

If you do not fully understand the set up process call us at 1-800-944-0240.

The Yurt Set Up Manual

Including Care & Maintenance

12', 14' & 16' Yurts

Pacific Yurts Inc.
Recreational Living Structures

Warning: *Safety is very important in the assembly and use of yurts. Therefore, purchaser should read the manual thoroughly before starting assembly in order to avoid accidental injury.*

Welcome Aboard!

We would like to take this opportunity to thank you for purchasing a Pacific Yurt and to welcome you to the growing Pacific Yurts' family. Pacific Yurts was established in 1978 and is the original designer and manufacturer of the modern lattice wall yurt. Today Pacific Yurts Inc. enjoys an international reputation for successfully adapting this ancient shelter into a modern recreational living structure. We are committed to the highest quality in our materials and workmanship. Each yurt is made of select kiln dried, second growth Douglas fir and space age architectural fabrics. We are dedicated to earning your confidence by giving you the same professional quality and service we ourselves appreciate. We welcome your comments and suggestions. Count on us to be here for all your future needs.

If after reading through this manual you have any questions about the installation of the yurt please call us at 800-944-0240.

Enjoy your yurt!

Sincerely,
The Pacific Yurts' Staff

Manufactured by:

Pacific Yurts Inc. • 77456 Hwy. 99 S • Cottage Grove, OR 97424 • 541-942-9435 • www.yurts.com

Patented. *All rights reserved. No part of this work covered by the copyright hereon may be reproduced or copied in any form or by any means – graphic, electronic, or mechanical, including photocopying, recording, or informational and retrieval systems – without written permission of Pacific Yurts Inc.*

©2017, Pacific Yurts Inc.

List of Diagrams

Typical Platform Elevation 1
Diagram I: Door Cut-Out In Drip Edge 3
Diagram II: Connecting The Lattice Wall To Door Frame 5
Diagram III: Securing The Lattice Wall 5
Diagram IV: Raising the Center Ring 7
Diagram V: Ring-to-Rafter Brackets 9
Diagram VI: Securing Tension Cable 9
Diagram VII: Typical Section Through Yurt 11
Diagram VIII: Perimeter Blocking 13
Diagram IX: Installation Of Interior Bracing 15
Diagram X: Additional Valance Lacing 15
Diagram XI: Unfolding Roof Insulation Liner 17
Diagram XII: Unfolding Custom 1/2 Roof Insulation Liner 19
Diagram XIII: Unfolding Top Cover 21
Diagram XIV: Top Cover Door Detail 21
Diagram XV: Wall Insulation Example 23
Diagram XVI: Roof to Wall Connection 25
Diagram XVII: Attaching Side Cover Clips 25
Diagram XVIII: Side Cover Attachment At Door 25
Diagram XIX: Securing The Side Cover 27
Diagram XX: Rain Diverter Inserts 29
Diagram XXI: Non-Opening Skylight 31
Diagram XXII: Dome Opener Spindle 32
Diagram XXIII: Opening Skylight 33
Diagram XXIV: Stovepipe Hole 35
Diagram XXV: Woodstove & Chimney Installation 36
Diagram XXVI: Gas Stove Installation 37
Diagram XXVII: Insulation Board Pattern 39
Diagram XXVIII: Water Catchment System 41
Diagram XXIX: Cable Tie-Down System 43
Diagram XXX: Gutter Parts 45
Diagram XXXI: Gutter Hanger Bracket 45
Diagram XXXII: Gutter Assembly 45

©2017 Pacific Yurts Inc.

Tool List

- ❑ 8’-10’ step ladder (two)
- ❑ Blanket or pad (for protecting top cover while installing dome)
- ❑ Cable cutters (for trimming excess on safety cable)
- ❑ Electric drill (or cordless driver drill) with Phillips bit
- ❑ Hand saw (for cutting lattice for stovepipe)
- ❑ Knife (for cutting lacing cord)
- ❑ Level
- ❑ Masking tape
- ❑ Miter saw (for trimming rafter supports on Snow & Wind Kit)
- ❑ Phillips screwdriver
- ❑ Standard screwdriver
- ❑ Pliers (for crimping springs on dome opener if applicable)
- ❑ Sawzall or equivalent (for cutting door opening in drip edge)
- ❑ Sharp scissors
- ❑ Small crescent wrench
- ❑ Staple gun
- ❑ Baby powder (for top cover insulation only)
- ❑Tape measure
- ❑1/4” hex driver (for Snow & Wind Kit only)

Note: *Remember the tools required may vary according to your platform height, options chosen and yurt size. Read entire manual before installation.*

©2017 Pacific Yurts Inc.

Contents

Tool List vi

Site Location viii

Platform (Floor) Construction viii

Ready To Start 2

Assembling the Framework 2
- Lattice Wall 2
- Door Frame 4
- Adjusting & Securing The Lattice Wall 4
- Tension Cable 4
- Raising The Center Ring & Rafters 6
- Securing Tension Cable 8
- Securing Rafters To Door Frame 8
- Safety Cable 10
- Wood Frame for Custom Curve Glass Window 10
- Snow & Wind Kit 10
- Perimeter Blocking 12
- Snow And Wind Protection 14

Installing Insulation & Outer Covers 16
- Insulating The Yurt 16
- Roof Insulation And Liner Facing 16
- Custom 1/2 Roof Insulation 18
- Top Cover 20
- Wall Insulation With Liner Facing 22
- Side Cover 24
- Custom Curve Glass Window 26
- Top Cover Valance 28

Dome Skylight 30
- Dome Skylight (Without Opener) 30
- Dome Skylight (With Opener) 30

Stovepipe Installation 34
- Direct Vent Gas Stove Installation 35

Additional Insulation Information 38
- Insulating The Roof With Insulation Board 38
- Floor Insulation 39

Additional Options 40
- Door Screen Curtain 40
- Center Ring Insert 40
- Insulated Window Cover 40
- Removable Cable Tie-Down System 42
- Perimeter Gutter System 44

Care & Maintenance 46
- Vinyl Covers 46
- 100% Polyester Side Covers 46
- Stove 46
- Lattice Wall 47
- Adjusting The Door 47
- Door & Door Frame 47
- Dome Skylight And Door Window 48
- Vinyl Windows 48

Glossary 49

Limited Warranty 50

Epilogue 51

©2017 Pacific Yurts Inc.

Site Location

Being what we call a ‘soft’ structure, the yurt reacts more readily to climatic conditions than do ‘rigid’ structures, therefore, it is important to choose your site carefully and take into account prevailing wind patterns, overhead tree limbs, water runoff, etc. In general, the best site would be protected from the wind, would receive morning sun and afternoon shade and be free from overhead objects such as large dead tree limbs that could damage the yurt in heavy winds. Plan your entry so that the doorway is facing away from prevailing winds.

We do not recommend setting up the yurt for extended periods without a platform (floor). However, if you do set up the yurt on the ground, make sure your site is leveled, leaving enough room to ditch around the perimeter for watershed control. Plan your site with the lay of the land and runoff patterns in mind so that you don’t get caught by surprise in the first rainstorm. Also, we recommend a ring of gravel or bricks so that the side cover does not come in contact with the damp earth. A temporary floor can be easily installed using a layer of bark chips covered with heavy black plastic and layered with carpeting. Be sure to stake down the lattice wall securely.

Platform (Floor) Construction

For a secure and comfortable installation, a well-built platform is necessary. To ensure a weather proof installation the platform needs to be circular and the same diameter as the yurt so the side cover fabric can extend below the interior floor level. This will provide a draft-free and watertight seal. Any exterior decking should be separated from, or at a lower level than the yurt platform. Unless you are skilled, enlist the help of an experienced carpenter for building the platform.

Contact Pacific Yurts to obtain recommended platform construction plans for the size of your yurt or download them from our web site www.yurts.com. Keep in mind that every site will be different, so the platform construction and footings should reflect the conditions of each individual site and may need to be modified from our recommended plan.

©2017 Pacific Yurts Inc.

Typical Platform Elevation

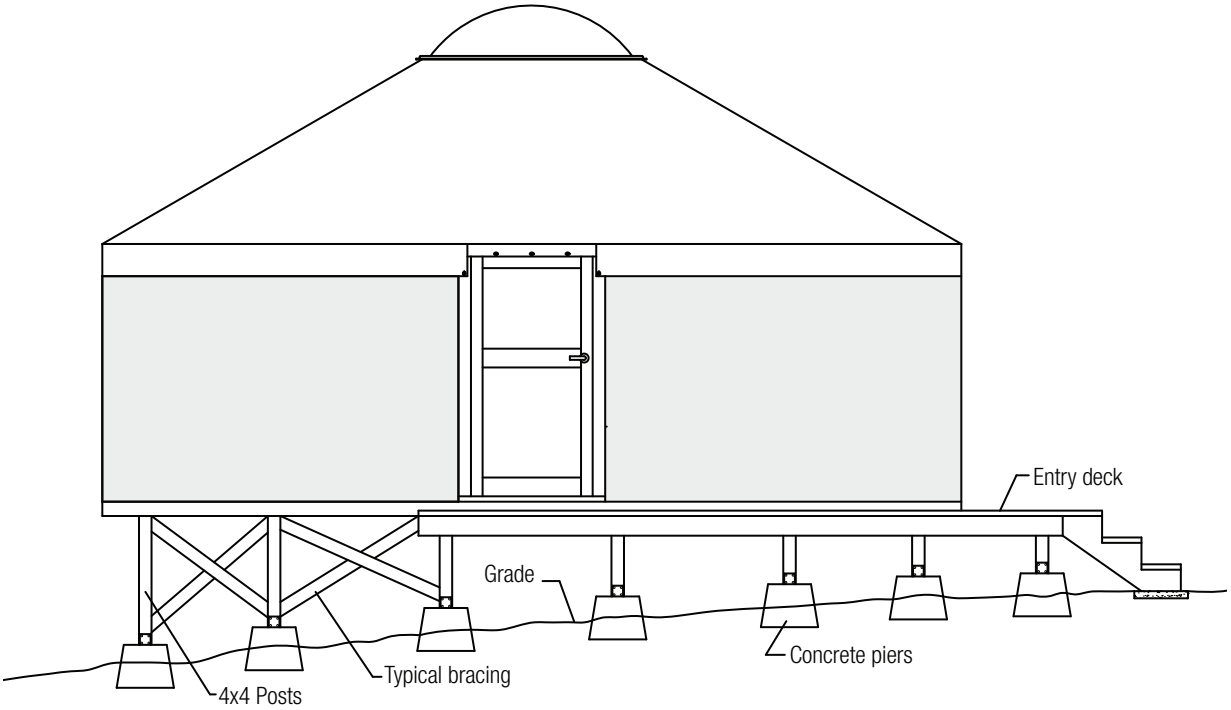

Note: Platform and footings should be designed according to the conditions of each individual site and local building requirements.

©2017 Pacific Yurts Inc.

Ready To Start

Now you are ready to start setting up the yurt. It is helpful at this point to familiarize yourself with the various components (see diagram on front cover) and to have read through **the entire** set up sequence so that it is clear and you know what to expect. A glossary is included in this manual to familiarize yourself with the terms used. All hardware for the yurt is provided in the hardware box.

1. Locate your door position(s) **exactly** and mark the center on your platform's drip edge.
2. Measure the door threshold length (43 7/8" for standard door and 55 5/8" for French door) and notch out 1" of drip edge material to this dimension using your mark as center. You are simply cutting the 1" portion of the plywood drip edge that extends above the interior floor level back down to floor level so the door threshold can overhang the circular platform. When marking the platform's drip edge for the door cut-out be sure to measure the width of the door threshold **straight across** rather than around the curved surface of the platform. ***(See Diagram I)***

Note: If you are setting up a yurt with doors at 6:00 & 12:00, be sure the doors are **exactly** opposite by running a string through the center point of the circle to the outside perimeter on each side. This is the center line of the doors. Do not move your doors from these positions.

Assembling the Framework

Lattice Wall

1. Locate and unwrap the lattice wall. It will be a cylindrical package roughly 24" in diameter and eight feet long. Take the lattice wall and a helper to the back of the circular platform, opposite to where you want the 6:00 door to be, and stand the lattice wall on end. **(Note:** Make sure the lattice wall is right side up! The bottom of the lattice wall is easily identified by the bolts that have been installed for the anchoring straps.) Also, note that there is an inside and an outside. The outside is the side with the holes in the middle of the rivets, while the inside has no holes in the rivets.
2. Carefully undo the straps around the lattice wall and stretch it out around the perimeter of the circular platform (just inside the drip edge), **making sure to keep it stable as you proceed. (Safety note: Be careful of pinch points while extending lattice wall.)**
3. Leave about 4 ft. for the door opening. The lattice wall will be secured to the platform after the door is in place.

©2017 Pacific Yurts Inc.

Diagram I: Door Cut-Out In Drip Edge

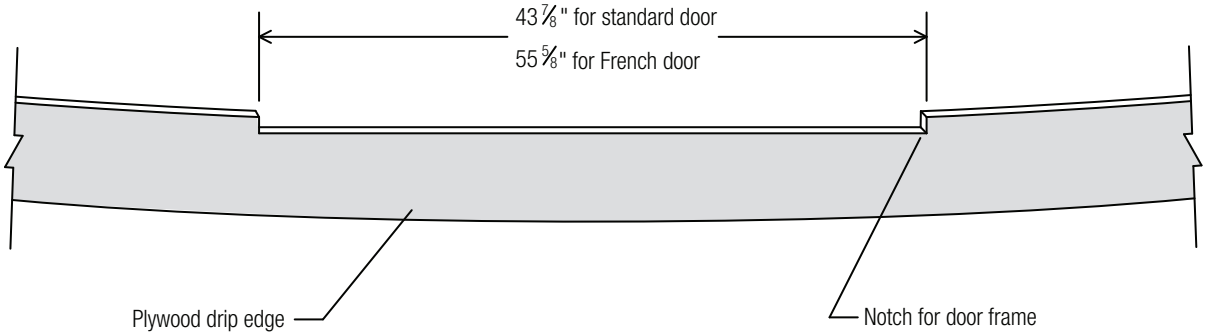

©2017 Pacific Yurts Inc.

Door Frame

1. Position the door frame at the opening, making sure the keyed side of the door faces outward. ***(See Diagram II)*** Remove the door clamp fascia and "door stickers" and set them aside for later.
2. Remove the wing nuts and washers (but not the wooden door clamps) from the inside of the door frame. The ends of the lattice wall have metal plates installed, which will attach to the bolts on the door frame.
3. Slip the end of the plate with the oval hole onto the clamp bolts then replace the washers and wing nuts and snug them down (not too tightly at this point).
4. Notice that there is a notch in the door threshold directly behind the door frame upright. Position the door threshold so that this notch is outside of the drip edge ***(see Diagram II)*** and then anchor the threshold to the platform using the screws provided in hardware box. The notch allows the side cover to extend below the threshold.

Adjusting & Securing The Lattice Wall

The lattice wall height should be consistent all the way around the perimeter (within 1/2").

1. Go around the perimeter and check the wall height with a tape measure every few feet. The finished height will vary depending on the yurt size and number of doors, but it is important that the measurement be consistent. The height of the lattice wall can be adjusted by expanding out the lattice wall where it needs to be shorter and contracting it where it needs to be taller. Be sure to keep the lattice wall against the drip edge as you go. **Helpful Hint:** Using a stick with the average height marked on it is a quick and easy way of measuring the height of the lattice wall.
2. Remove the cap nuts, washers, and bolts, located approximately every sixth crotch along the bottom of the lattice wall. Then bolt on the formed lattice wall anchoring straps (from your hardware box) and anchor them to the edge of the platform with the screws provided. ***(See Diagram III)*** These brackets are designed so the screws will go through the plywood drip edge and into the flooring material.

Tension Cable

1. Locate the steel cable (in your hardware box) labeled "tension cable". Unroll the cable by starting with one end 'off center' above the 6:00 door. This is important so that the cable hardware does not interfere with the rafters that will be resting on top of the door frame.
2. Lay the cable in the crotches along the top of the lattice wall. Take the slack out as you go and be sure not to miss a crotch. Hook the two ends together as you come around, meeting above the door where you began. If the two ends do not meet there is excess slack in the cable. Simply pull out the slack a little at a time, working it towards the cable ends. Before setting the rafters make sure to distribute any slack in the cable evenly around the perimeter.

©2017 Pacific Yurts Inc.

Diagram II: Connecting The Lattice Wall To Door Frame

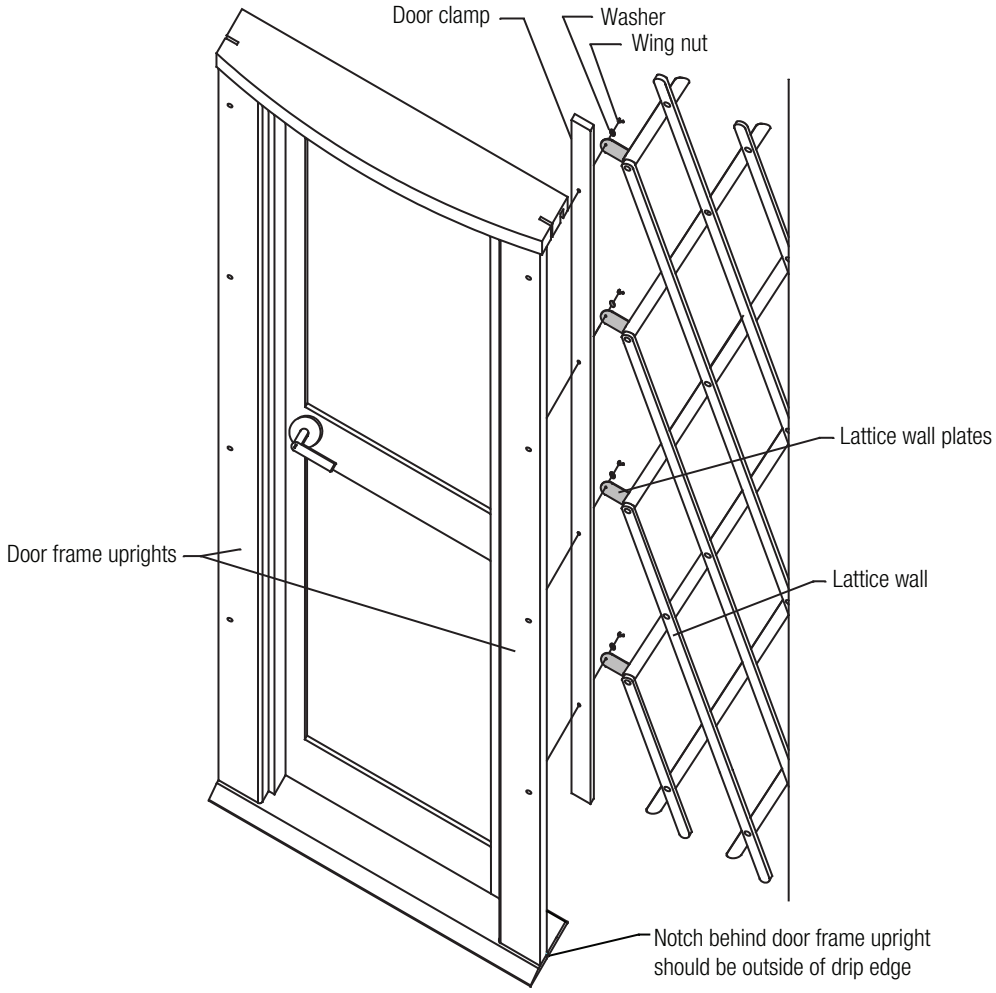

Diagram III: Securing The Lattice Wall

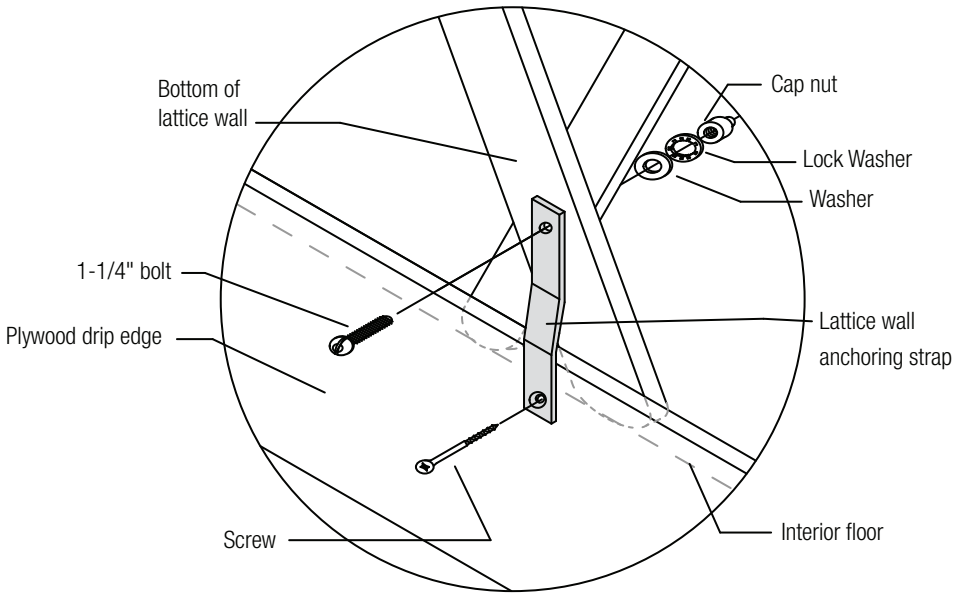

©2017 Pacific Yurts Inc.

Raising The Center Ring & Rafters

Raising the center ring is the most exciting step and needs to be executed with some care. Extra care should be taken on larger yurts because of the added weight of the components, length of the rafters and height of the center ring. **Be sure to read this entire section before beginning.**

1. Disconnect the dome skylight from the center ring. The dome will be installed later.
2. Bring the center ring into the yurt and lay it in the center of the floor with the bolt heads down and nutted ends up.
3. **Important Note: If you purchased a dome opener, it is at this point you will want to position the aluminum bracket on the center ring away from the prevailing winds to avoid having the wind catch the dome on the open side. The aluminum bracket is on the side that opens, not the hinge side.** Using a heavy felt pen (and referring to the Rafter Spacing Diagram enclosed in your hardware box) mark the locations of the three or four evenly spaced holes on the center ring (shown in blue on diagram). These will be the points at which the first "set up" rafters will be inserted to raise the center ring. The rafters shown in orange have been modified to rest on top of the door(s).
4. Locate the positions where these "set up" rafters will rest on the cable ***(again refer to the Rafter Spacing Diagram)*** and mark each of these cable spaces with a piece of tape to facilitate the set up.
5. Bring five or six rafters into the center of the yurt and lay them aside. Place one of the rafters on one of the cable's marked spaces (notched end to the cable and the pin towards the ring). **Note: The notched end of the rafter has a rounded top and a pointed bottom. The pointed end should be facing downward when the ring and rafters are erected.**
6. Lift the ring up so it is on edge and insert the pin of the rafter into the ring. Staying on the marked holes and cable spaces only, do the same with the second rafter. ***(See Diagram IV)***
7. Lift the ring off the ground letting the first two rafters support one side of it and insert the pin of the third rafter into the remaining marked hole. Use the third rafter to lift the center ring up into position, keeping pressure against the first two rafters, and then place the notched end on the cable. It helps to have someone standing by with an extra rafter to help push the ring up and brace it until you get a few more rafters into position. ***(See Diagram IV)***

CAUTION: UNTIL THE RAFTERS ARE ALL INSERTED, THE INTERIOR OF THE YURT SHOULD BE CONSIDERED A HARD-HAT ZONE; CHILDREN AND THOSE NOT INVOLVED WITH THE ASSEMBLY SHOULD WAIT OUTSIDE! IF SOMEONE PUSHES A RAFTER INTO THE RING WITH TOO MUCH FORCE IT COULD MAKE THE RAFTER NEXT TO IT SLIP OUT OF THE RING AND FALL!

8. If you purchased the Snow & Wind Kit you will have four ring-to-rafter brackets, which slide onto the pin end of the rafter and screw to it. After fastening these brackets onto four rafters, carefully insert these rafters keeping them evenly spaced as shown on Diagram V. It is best to wait until all of the rafters have been installed before screwing the ring-to-rafter brackets to the center ring because the center ring will rise upward as you install more rafters.
9. Carefully insert the rest of the rafters, being sure to balance your placement by keeping the rafter pattern symmetrical (so the weight stays equally distributed) and keeping two lattice wall crotches between each rafter. When inserting the rafters, it works best to set the pin end in completely, bring the other end up under the cable, push the lattice wall out a little with your shoulder (not too far) and then hook the rafter onto the cable. **Do not force the rafter into the ring. Once you get the correct angle it will easily slip in.**
10. Install the rafters over the door(s) last. These rafters have been modified to rest on top of the door frame and hold the tension cable in place. ***(See Diagram VII page 11)***

©2017 Pacific Yurts Inc.

Diagram IV: Raising the Center Ring

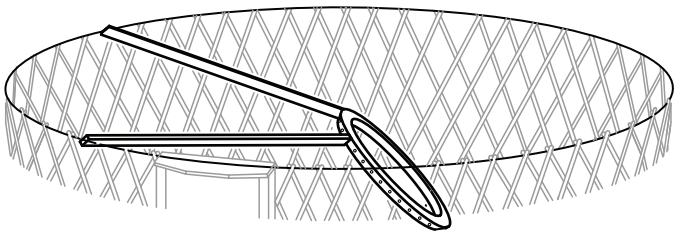

Insert first two rafters
while ring is at floor level.

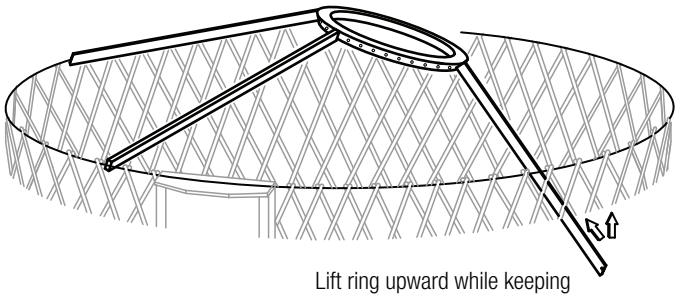

Lift ring upward while keeping
pressure against first two rafters

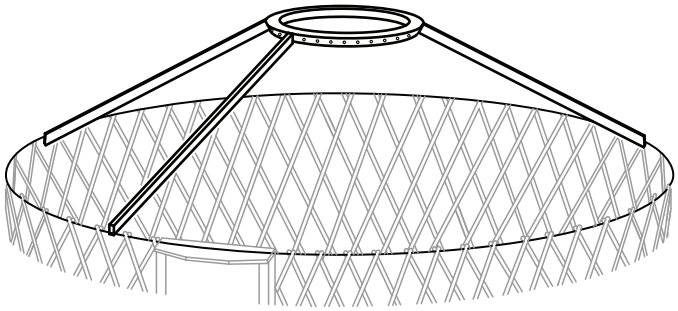

Slip notch of third rafter
onto tension cable

©2017 Pacific Yurts Inc.

11. Once the rafters are in place double check to make sure all the rafters square up with the center ring and are separated by two lattice wall crotches. Also check to be sure that all of the rafters that should be resting on the door are actually on top of the door and not next to it ***(refer to the Rafter Spacing Diagram).*** If your yurt includes ring-to-rafter brackets you can now install the final screws securing the brackets to the center ring.

Securing Tension Cable

1. To eliminate the possibility of the rafter lifting off of the cable a screw will need to be installed on the underside of the rafter just below the tension cable into a predrilled hole. ***(See Diagram VI)*** This secures the rafter end onto the cable. **Do not substitute longer screws for those provided.**

When installing the screw, install it only deep enough to make the head of the screw flush with the bottom of the rafter. **If installed too deeply it is possible to drive the screw through the rafter and damage the top cover.**
Note: The rafters over the door(s) will not need these screws because they will be fastened to the door frame.

Securing Rafters To Door Frame

Rafters over doors will be secured in position using header brackets provided in the hardware box. Each of the modified rafters have a slight notch where the tension cable will be held in place against the door frame.

1. From inside the yurt, place the header bracket onto the rafters above the door (with the flat side resting on top of the door header) and slide it forward until it butts against the tension cable as shown on ***Diagram VII.***
2. Using the screws provided, fasten the brackets onto the rafters. Check to be sure the door is plumb and square before fastening the header brackets to the door header.

©2017 Pacific Yurts Inc.

Diagram V: Ring-to-Rafter Brackets

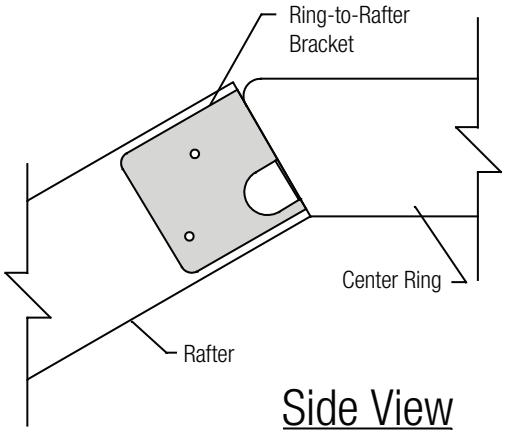

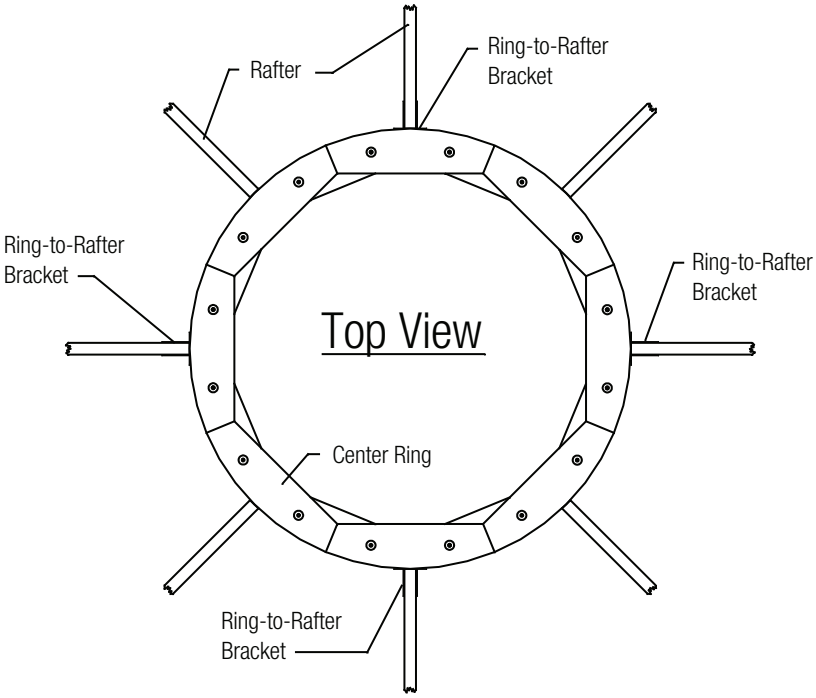

Diagram VI: Securing Tension Cable

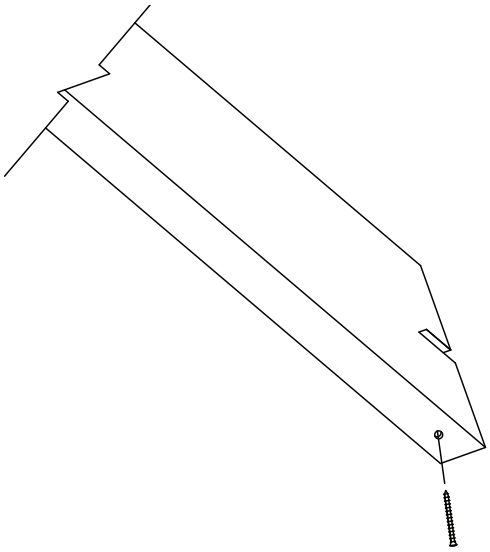

©2017 Pacific Yurts Inc.

Safety Cable

A "Safety Cable" is included which should be installed through the holes in each rafter, near the center ring. It will help hold the rafters into the ring.

1. Remove the cable clamps from the end of the safety cable and thread it through the predrilled holes in the rafters.
2. Once the cable is laced through the rafters and you get back to the starting point, pass the end of the cable through the loop on the opposite end and pull tight.
3. Put the cable clamps back on and tighten securely.
4. Cut off any excess cable using a cable cutter.

Wood Frame for Custom Curve Glass Window

If you purchased Custom Curve glass windows please refer to your separate instruction flyer. If you are not installing the glass windows at this time go directly to the instructions for installing the Snow & Wind Kit below.

Snow & Wind Kit

If you purchased the Snow & Wind Kit continue. **If you are not installing the Snow & Wind Kit at this time go to page 16 for installing the roof insulation.** This is to be done after the wood frame is completely installed. **If you did not purchase insulation for your yurt, go directly to page 20 for top cover installation. Note:** The Snow & Wind Kit involves a lot of screws. If the yurt is being set up at a site without electricity be sure to have plenty of fully charged batteries for cordless drills or a generator to charge them.

1. Locate and unwrap the package(s) marked “Rafter Supports”. The 2x4 rafter supports will be installed against the lattice wall under each rafter. ***(See Diagram VII).*** **They are purposely provided long** so they can be cut on site to fit exactly (since the lattice wall height may vary). Be sure to cut the square end when cutting them to length so the angled end is not changed. (A miter saw works well for this.)
2. Measure and cut one rafter support and check it under several rafters to make sure it is the proper length. Once you are convinced that you have the right length, cut all of the rafter supports to the same length.

2” x 4” mending plates are provided to attach the rafter supports to the rafters **on both sides.** 2” x 2” angle brackets are provided for attaching the rafter supports to the floor on each side ***(see Diagram VII)***

3. Use the cardboard template from your hardware box and the pilot bit provided to drill pilot holes for the metal plates before screwing them onto the rafter supports. This will ensure that the plates are properly positioned and the screws are offset so they do not hit each other.
4. Using a ¼” hex driver, attach the mending plates and angle brackets to the rafter supports with the hex head screws provided (in hardware box). Be sure to drive the screws in **straight** to avoid having the heads pop off.

©2017 Pacific Yurts Inc.

Diagram VII: Typical Section Through Yurt

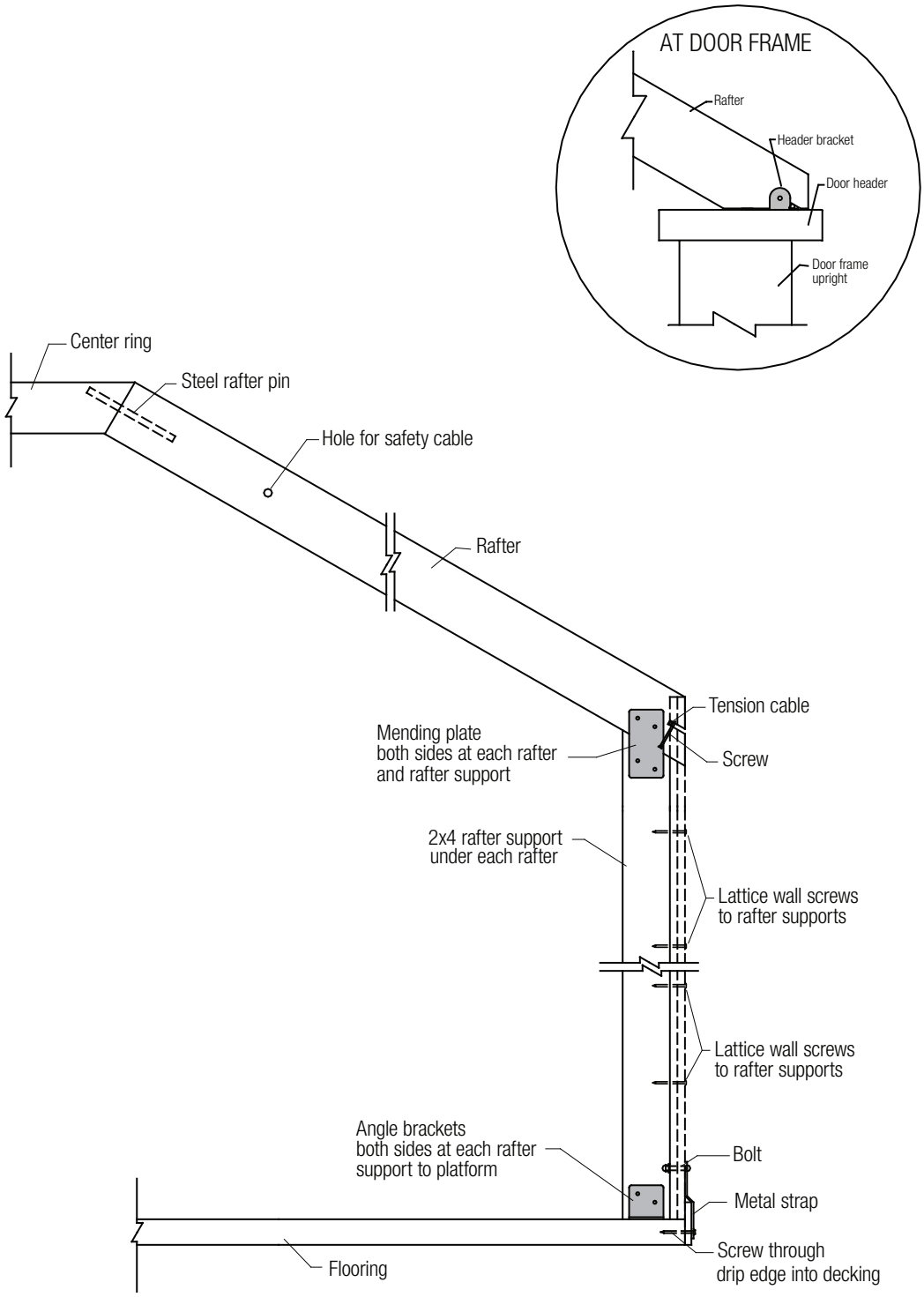

©2017 Pacific Yurts Inc.

5. Once all of the rafter supports have the hardware mounted to them, stand them up under each rafter and make sure the rafter is centered between the lattice wall crotches. Note: It is helpful to place a 1" block against the drip edge to ensure proper positioning of the rafter support. Have one person drill pilot holes while another installs the screws to secure the rafter support to the floor.
6. Once the rafter support has been anchored to the floor make sure it is plumb and secure it to the rafter. Be sure to drill pilot holes before driving in the screws.
7. Repeat for all rafter supports.
8. Double check to be sure the rafter supports are plumb, centered between lattice wall crotches and are tight against the lattice wall. **From outside the yurt drill a pilot hole through the lattice wall (where it crosses) into each rafter support using the drill bit provided *(see Diagram VII, page 11).* This should be done in four locations per rafter support. Drill just above the rivet where necessary. Then drive a 1-7/8" screw (from hardware box) through the lattice wall into the support at each location.** This is done from outside of the yurt before the side cover is installed. These screws are an important part of the Snow & Wind Kit providing shear to prevent torque in the yurt.

Perimeter Blocking

If you purchased Perimeter Blocking continue. **If you are not installing Perimeter Blocking at this time go to page 16 for installing the roof insulation. If you did not purchase insulation for your yurt, go directly to page 20 for installing top cover.**

1. Locate and unwrap the package marked "Perimeter Blocking". Perimeter blocking is essentially 2x4 blocks fastened horizontally between the rafter supports and door(s). This blocking creates a secondary 'compression ring' near the top of the wall, so it is important that it be continuous. Do not omit blocks next to the door(s).
2. Due to variances in the rafter support spacing the perimeter blocking is prefinished, but provided in bulk lengths (approx. 8') that will need to be cut to fit on site. Measure and cut the 2x4's to fit between the rafter supports (near the top), then screw them into position. Staggering the blocks will allow you to secure screws through the rafter support into the end of each block as shown on ***Diagram VIII.*** Be sure to pre-drill pilot holes to prevent splitting the rafter supports or blocking.

©2017 Pacific Yurts Inc.

Diagram VIII: Perimeter Blocking

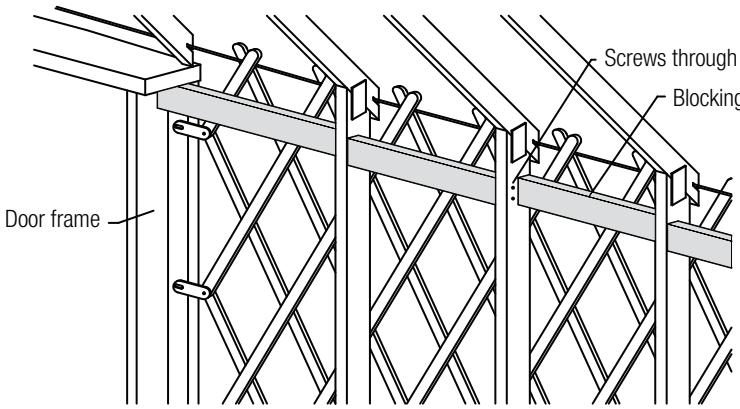

When cutting blocks to fit between the rafter supports you can achieve a tighter fit and better aesthetics by angling the cut slightly. The angle settings for a miter saw listed below are approximate, but may be helpful:

12' Yurt - 9°	20' Yurt - 5°
14' Yurt - 8°	24' Yurt - 4°
16' Yurt - 6°	30' Yurt - 4°

©2017 Pacific Yurts Inc.

Snow And Wind Protection

Do not let heavy snows collect on the roof in excess of 12". A push broom can be used to sweep down the excess, or a rope thrown over the yurt can be used to cut under the snow causing it to slide off. Also, be aware that you are risking possible snow avalanche damage to the yurt if you choose your site directly under a tall coniferous tree. A protective snow fence is a good idea where there could be a large snow bank or build-up exerting pressure against the side of the yurt. A freestanding, well built porch structure will keep snow build-up away from your entry area, providing easy access in case of heavy snow. Integrating expanded metal grating into the porch can also help prevent excess snow build-up in front of the door by allowing the snow to fall through.

For both heavy snow and wind conditions, or when roof snow load cannot be maintained regularly, four 4" x 4" posts should be installed under the center ring as an additional shoring-up system. (See Diagram IX) These posts are not included in the Snow & Wind Kit and can be purchased from your local lumber supplier. Make sure the posts are evenly spaced on the center ring, plumb and are supported by the joists under the floor (not just the flooring itself). The posts may be secured with Simpson 4" x 4" BC40 Post Cap/Base hardware (or equivalent) using wood screws at the top and bottom (or lag screws and angle brackets).

In areas where very heavy wind exposure is expected, we strongly recommend taking some extra precautions to prevent possible damage to the structure:

1. Purchase and install Pacific Yurts' cable tie-down system ***(see page 42)*** and perimeter blocking ***(see page 12).***
2. Be sure your door is closed, windows are attached and the dome is closed during heavy wind.
3. The lacing on the yurt covers should be periodically checked and pulled tight if necessary. Optional zigzag lacing from the valance grommets to eyescrews, which can be installed around the base, is recommended in areas with frequent high wind ***(see Diagram X).***
4. For domes with openers – Install a second pair of long springs and crimp the ends securely. This will put more tension on the dome as it is opened, so you shouldn't crank it up more than a few inches.

©2017 Pacific Yurts Inc.

Diagram IX: Installation Of Interior Bracing

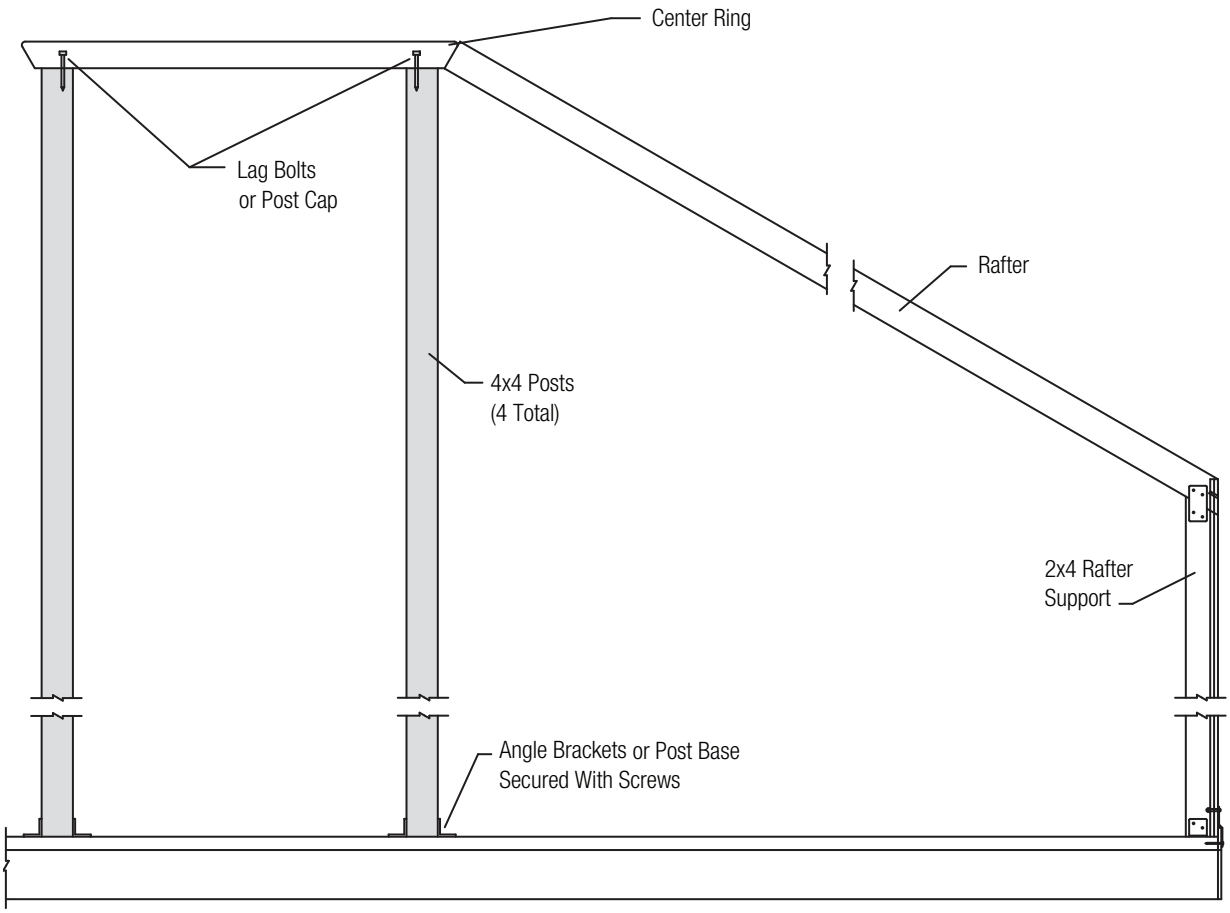

Diagram X: Additional Valance Lacing

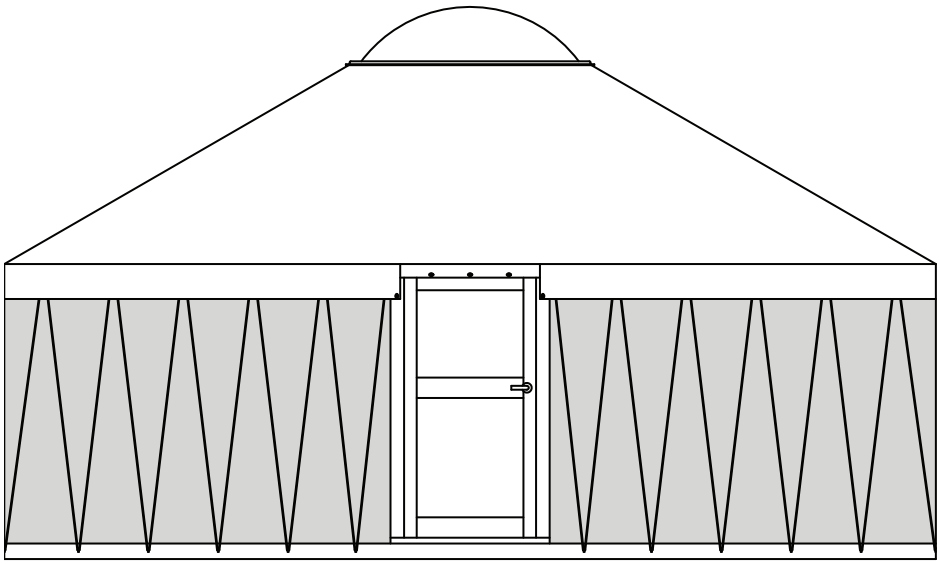

©2017 Pacific Yurts Inc.

Installing Insulation & Outer Covers

Insulating The Yurt

Many materials have been used successfully to insulate the yurt. Climatic conditions and individual considerations of light transmission, portability, comfort level and expense all are involved when deciding on the optimum insulation. In the milder climates no insulation at all may be required. However, in cold areas like Alaska or warm tropical climates, either our space age reflective insulation or Thermax insulation board or its equivalent ***(see specifications page 38)*** will provide more comfort. In colder climates we recommend insulating under the platform (see page 39). **Note: We do not recommend using blankets or other moisture retaining fabrics for insulation liners as they may cause severe mildew problems.**

Roof Insulation And Liner Facing

If you did not purchase the roof insulation go to page 20 for installing the top cover. If you purchased the custom 1/2 roof insulation (which is used with a Solar Skylight Arc) please refer to the instructions on the page 18 instead of the instructions below.

Choose a day for installation that is not too windy as this may cause the liner to blow away before it is properly secured. Install the fabric liner facing only after the rafters have all been put in.

1. Locate the fabric liner facing. It is a small bundle of ivory colored fabric. Note that the liner facing is not sewn to the insulation as with the wall insulation and that it is all one continuous cone-shaped piece that is folded.
2. Using a step ladder (or scaffolding) in the center of the yurt, carry the fabric liner facing up through the center ring, unfold and spread it out over the rafters while a helper pulls the hemmed edge down around the rafter ends. ***(See Diagram XI)*** Be sure the liner facing is installed evenly and overlaps the rafter ends equally around the yurt perimeter. In windy conditions the facing can be secured by using a staple gun to staple through the liner into a few evenly spaced rafter ends. This should hold the facing down tight. Before proceeding check that the liner has the rough seams facing upward and finished seams facing inward.
3. Lift the reflective insulation up onto the roof from below, placing it on top of the liner facing. One person should handle the upper end at the center ring while another works around the perimeter of the yurt.
4. Carefully unfold the insulation and bring both ends around until they meet.
5. When the insulation seam is properly aligned use the foil tape from the hardware box to secure the open seam. Tape the top half from the ladder at the center ring. Tape the bottom half from a ladder down below. **Helpful Hint:** You can reach the middle of the roof to seal the foil tape by using one of the “door stickers”. (They were clamped into the door frame when you received the yurt.)
6. Check the insulation for fit. Trim the insulation at the door frame so it will not interfere with the operation of the door. **Do not trim the insulation that overlaps the side wall.** It will overlap the wall insulation for a draft-free seal. ***Go to page 20*** **for installation of top cover.**

©2017 Pacific Yurts Inc.

Diagram XI: Unfolding Roof Insulation Liner

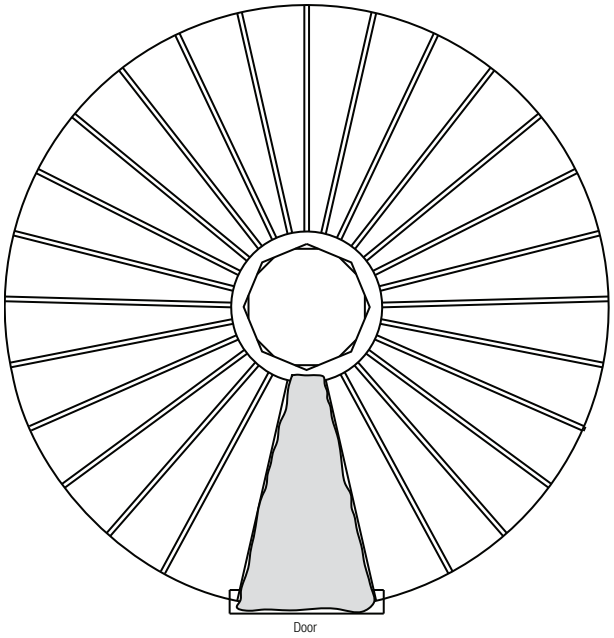

Slide liner down rafters

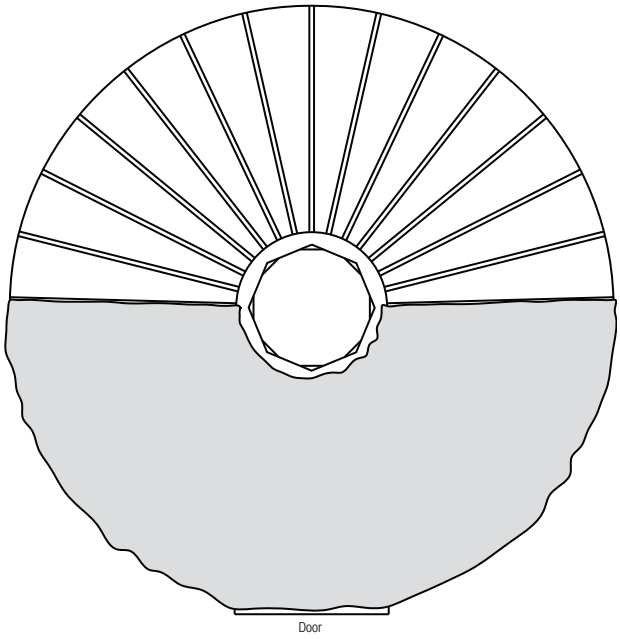

Unfold liner

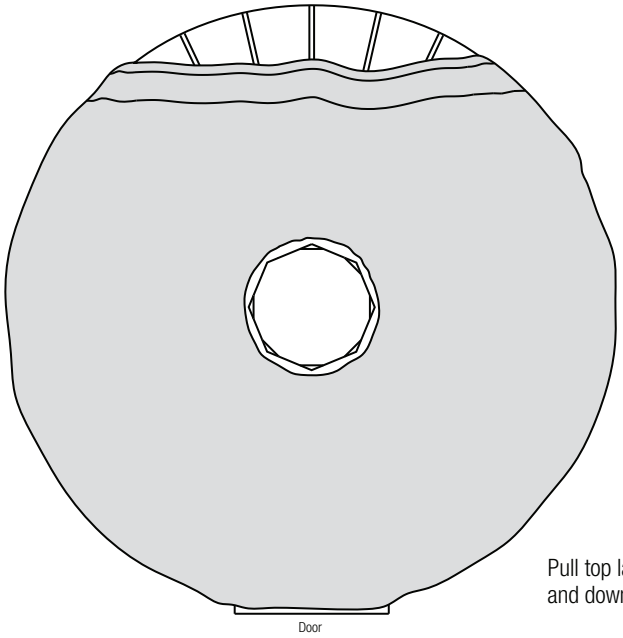

Pull top layer over center ring
and down to perimeter

©2017 Pacific Yurts Inc.

Custom 1/2 Roof Insulation

The 1/2 insulation is used with the optional Solar Skylight Arc. **If you did not specifically order the 1/2 insulation, go directly to page 20 for installing the top cover.**

Choose a day for installation that is not too windy as this may cause the liner facing to blow away before it is properly secured. Install the fabric liner facing only after the rafters have all been put in.

1. Locate the fabric liner facing. It is a small bundle of ivory colored fabric. Note that the liner facing is not sewn to the insulation as with the wall insulation.
2. Using a step ladder in the center of the yurt, carry the fabric liner facing up through the center ring. Unfold and spread it out over the rafters while a helper pulls the hemmed edge down around the rafter ends (the top of the liner should not overlap the center ring more than 2"). You will notice that the liner will only cover half of the roof.
3. Position the center of the liner facing **opposite** the center of the Solar Arc position (refer to your “Exhibit A” diagram). Be sure the liner facing is installed evenly and overlaps the rafter ends equally around the yurt perimeter. Before proceeding check to be sure the liner has the rough seams facing upward and the finished seams facing inward. The liner facing can be secured by using a staple gun to staple through the liner into a few evenly spaced rafter ends and to the center ring. This should hold the facing in position.
4. There will be a few inches excess, which will be folded back over the reflective insulation and fastened to the top of the nearest rafter after the top cover is installed.
5. Lift the reflective insulation up onto the roof from below, placing it on top of the liner facing. One person should handle the upper end at the center ring while another works around the perimeter of the yurt and staple into position. Insulation should overlap the outside edge of the center ring by no more than 2".
6. Install top cover carefully so that insulation and facing will not be moved out of position. **(Instructions on page 20)**
7. After the top cover is in position, determine a satisfactory ending point for the insulation over the nearest rafter on either end of the solar arc. If necessary, carefully trim the insulation **(not the liner)** with scissors along the edge of the rafter being **very** careful not to damage the top cover. To protect the top cover from being accidentally cut during this process put heavy cardboard between the top cover and the insulation being cut.
8. Fold the excess fabric facing neatly back over the insulation and use thumb tacks every few feet along the top of the rafter for a neat finished appearance.

©2017 Pacific Yurts Inc.

Diagram XII: Unfolding Custom 1/2 Roof Insulation Liner

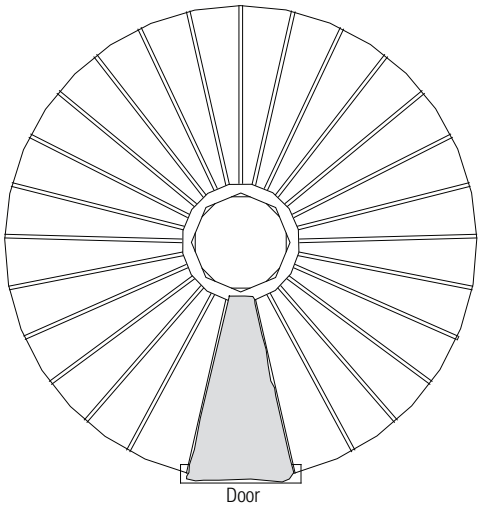

Slide liner down rafters

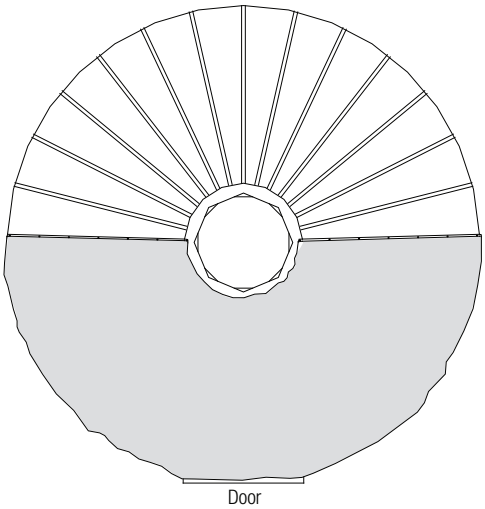

Unfold liner

Note: Example reflects Solar Arc located at 12:00 position.

©2017 Pacific Yurts Inc.

Top Cover

The top cover will be unfolded starting at the 6:00 door on your "Exhibit A" diagram. If you have multiple doors be sure the correct door cut-out is over the correct door frame by checking the style of door and layout plan noted on the "Exhibit A" diagram sent with your Purchase Agreement. If you have the roof insulation **it is highly recommended to sprinkle some baby powder onto the foil insulation before installing the top cover.** This will allow the top cover to slide more easily on the foil insulation and make adjustments easier.

1. Locate the top cover. It will be in a bag made from the same material as the top itself. Take your top cover out of the bag and remove the binding strap tied around it. Notice that the top cover has been folded into a long narrow triangle.
2. Using a step ladder set up under the center ring carry the top up through the center ring opening and unroll it down towards the 6:00 door frame. **Note:** The wide end of the triangle will be toward the door and the narrow end toward the center ring. ***(See Diagram XIII)*** **Caution: Premium top covers are are especially heavy.**
3. With one person on the step ladder or scaffolding in the center of the yurt and another working around the perimeter of the yurt, unfold the top cover a little in each direction (2-3 folds).
4. Look for the door cut-out opening in the top cover valance. It is easily identified by the series of oval grommets around it (rather than round grommets). The door detail should be similar to that shown on ***Diagram XIV.*** This cut-out must be kept centered over the door frame during the rest of the installation process.
5. Unfold the top cover in both directions starting at the door until it is halfway unfolded and covers half of the rafters. Installing a few twist-lock connectors (see step 7) and securing the top cover at the door will help keep the door detail aligned.
6. The person at the top of the ladder should pull the top layer of top cover fabric up over the center ring and down the other side. It is helpful to tie a cord to a few grommets on the top cover and use the cord to help pull the top layer of fabric over the center ring and down to the perimeter on the other side. Finish by pulling the outside edge down snugly around the ends of the rafters. **Be sure that the top cover is centered** on the center ring and pulled down evenly around the perimeter. **Note:** The top cover does not need to be fastened to the center ring.
7. Check the final fit around the door frame and mark the oval grommet locations. Drill 7/64" pilot holes with bit provided and screw in the twist-lock connectors (from hardware box). ***(See Diagram XIV)*** Failure to drill pilot holes may result in breaking the twist-lock shank. Overtightening can also result in a broken shank.

©2017 Pacific Yurts Inc.

Diagram XIII: Unfolding Top Cover

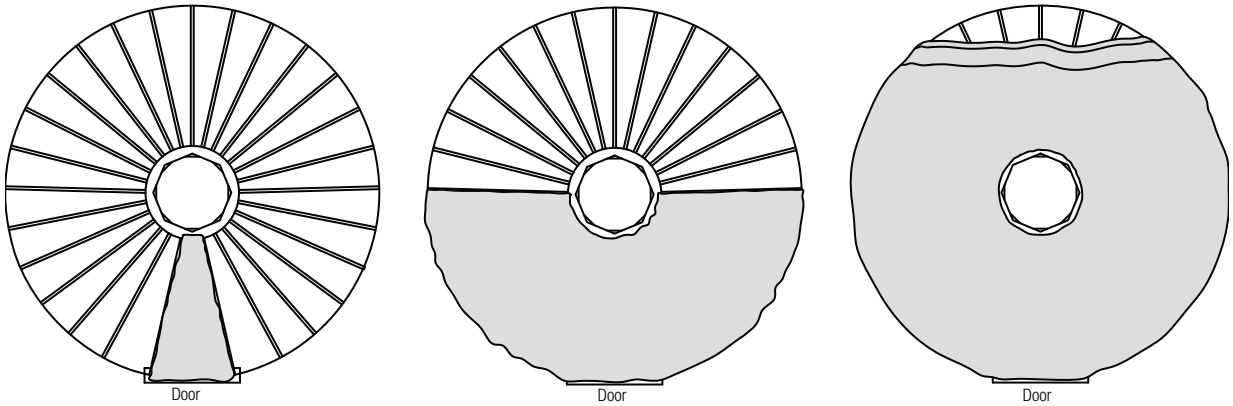

Slide top cover down rafters

Unfold top cover

Pull top layer over center ring and down to perimeter

Diagram XIV: Top Cover Door Detail

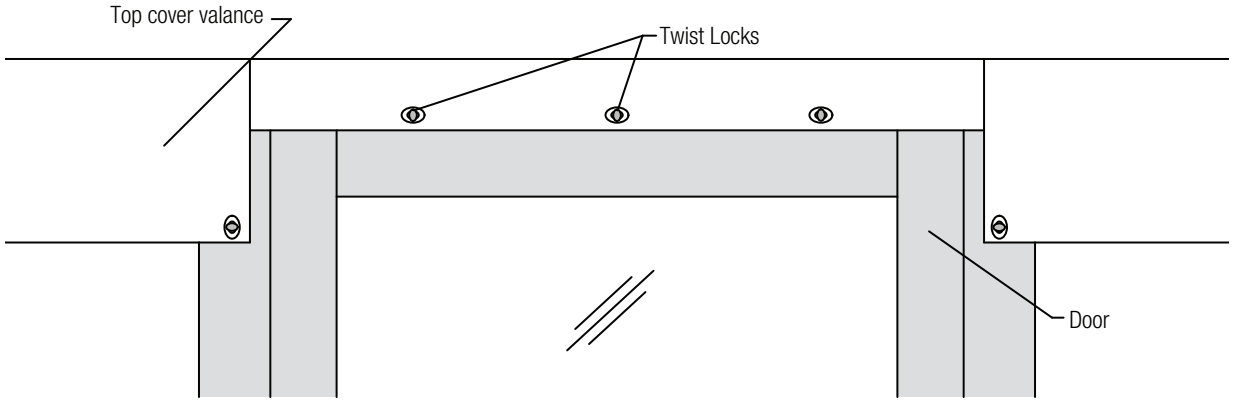

©2017 Pacific Yurts Inc.

Wall Insulation With Liner Facing

If you did not purchase the wall insulation go to page 24 for installing your side cover. If you purchased the wall insulation continue.

Locate and open your wall insulation roll. A diagram of the window and door placement is taped to the foil side of the roll. This corresponds to the window placement you requested on your order. The insulation wall is made with the window sections separate from the wall sections. This approach allows you to locate the windows to match the side cover more exactly. There is a numbered sticker on the foil side of the **wall sections only** that will match the number on the diagram. All window sections are interchangeable (unless vertical or horizontal windows were ordered), so they are not numbered. Use the diagram on your insulation to help facilitate putting your insulation up in the correct order. ***Diagram XV on page 23 is an example only.***

1. Starting with the first section of insulation at the edge of the door hang it **temporarily** (outside the lattice wall) from the steel tension cable with a few of the 'S' hooks provided. Grommets are installed at the top of the liner for this purpose. Keep in mind that the 'S' hooks will be removed and the wall insulation secured to the tension cable after the side cover is installed ***(see #10, page 26).***
2. Work around the yurt clockwise hanging the wall and window sections according to your diagram. Overlap each of the sections approximately 10". This allows adjustment later to match your side cover window position should this be necessary for a better fit. **Note:** The overlap may not end up being 10" when you are finished. **Hint:** If you have the **vinyl** side cover, applying baby powder to the foil side of the insulation before installing the side cover will make it easier to adjust and achieve a tight fit.
3. After installing side cover (see next section) align the insulation window sections with the windows if necessary. Make sure the insulation panels end at the edge of the door frame. **The insulation does not get clamped into the door frame.**

©2017 Pacific Yurts Inc.

Diagram XV: Wall Insulation Example

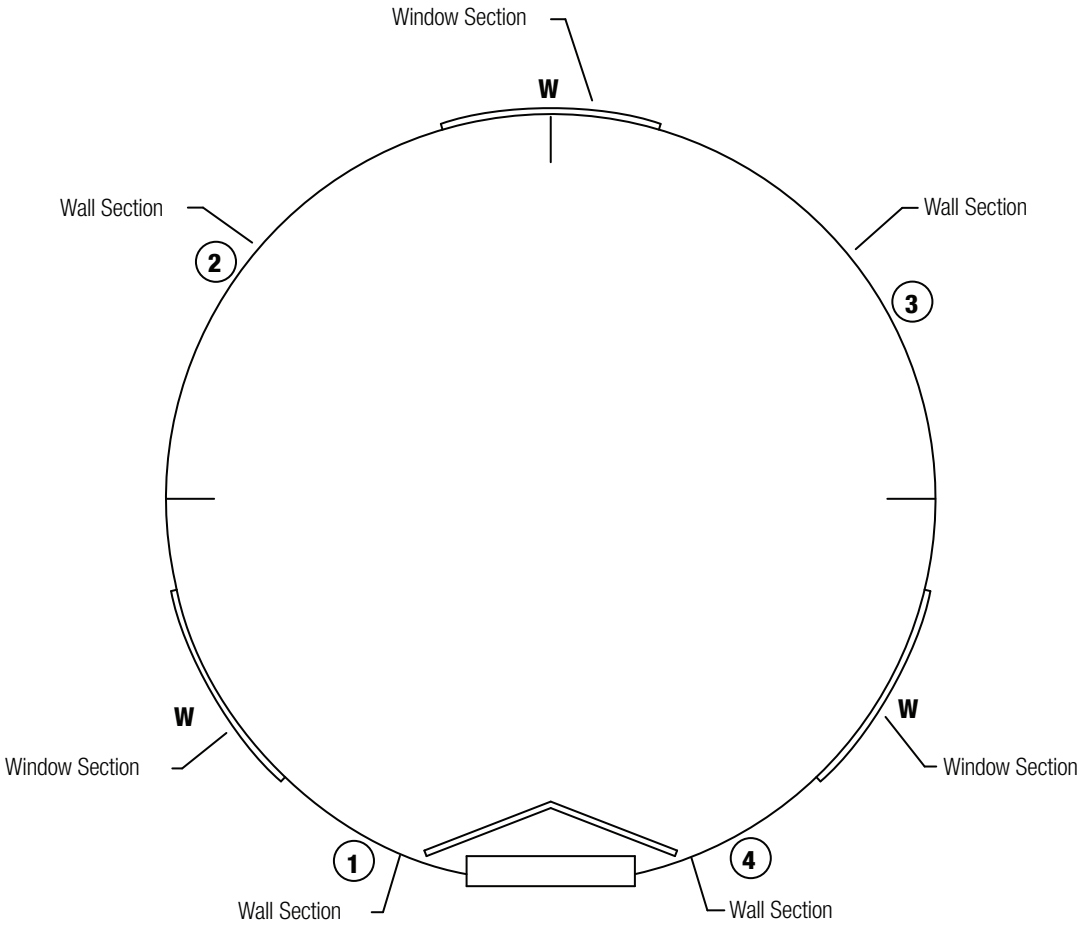

Layout is an example only

©2017 Pacific Yurts Inc.

Side Cover

You will be hanging the side cover onto the 3/16" polyester cord that has been pre-installed through grommets **under the top cover valance *(see Diagram XVI).*** This cord has been temporarily tied off at the door(s). The excess cord allows for adjustment and may be trimmed later. In order to expose this cord you will need to fold the top cover valance up so that it is out of the way during the installation of the side cover.

1. Locate the side cover. It will be in a bag made of the same material as the side cover itself. Take the side cover out of the bag. **Note:** The top of the side cover has the white clips and the bottom has metal grommets.
2. Two pieces of unfinished lath labeled “door sticker” were clamped in the door frame. These door stickers will be used when fastening the side cover into the door frame. In order to secure the side cover into the door frame you will need to loosen the wing nuts as much as you can without removing them.
3. The side cover will be unrolled starting at the right-hand edge of the door (outside the lattice) going counter-clockwise. Notice that the end of the side cover has a pouch for a door sticker to slide into ***(See Diagram XVIII).*** Slide the door sticker into the pouch then insert the side cover into the edge of the door frame (between the door frame and the wooden clamp) until it butts against the bolts ***(see Diagram XVIII)*** and tighten the wing nuts **very securely**.
4. Unroll the side cover around the perimeter attaching the nylon clips onto the 3/16” cord as you go. It works best to have one person unrolling the side cover around the yurt while another clips the side cover onto the cord. You can be sure the correct side of the cover is facing outward by confirming that the window screens face inward and the window flaps face outward. To attach the clips onto the cord, simply twist the clip 90 degrees to the left, slip it onto the cord and twist it back into position making sure the cord “snaps” into the clip on both sides. ***(See Diagram XVII).*** **Do <u>not</u> clip the side cover onto the steel tension cable.**
5. Notice that the end of the side cover at the left side of the door does not have a door sticker pouch. The side cover will get folded around a door sticker and clamped into the door frame. This allows for future adjustments. Pull all slack in the side cover around the circumference and fold the side cover overlap around a door sticker so that the excess fabric is between the side cover and lattice wall (or sidewall insulation) as shown on ***Diagram XXVIII).*** **Hint:** Attaching the excess side cover fabric to the cord before tucking the door sticker into the door frame will help hold it straight and avoid wrinkles. A tight side cover installation will be more aesthetic and provide a better seal to the platform.
6. If you have wall insulation, it helps to slide the insulation piece nearest the door to the side while securing the side cover into the door frame. You can slide it back after the side cover is secured in place. Now adjust the positioning of the door sticker for a tight side cover fit before inserting it into the edge of the door frame (between the frame and the wooden clamp) until it butts against the bolts ***(see Diagram XVIII)*** and then tighten the wing nuts **very securely**. **Note:** Do not “roll” the side cover around the door sticker.
7. Check the gap between the grommet strip under the valance (where the cord is installed) and the top of the side cover. This gap needs to be approximately 1” and consistent all the way around the yurt. ***(See Diagram XVI)*** Adjust the gap by tightening or loosening the cord until the gap is consistently 1” all of the way around, then tie the ends of the cord ***securely*** to the last grommet on the top cover next to the door. Excess cord may be cut and removed. Melting the end of the cord after cutting will keep it from unraveling.

©2017 Pacific Yurts Inc.

Diagram XVI: Roof to Wall Connection

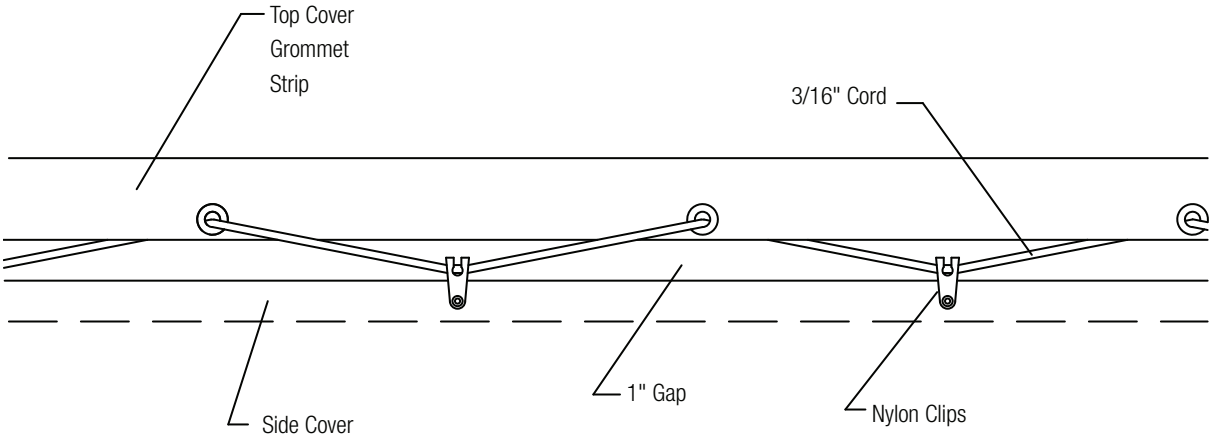

Diagram XVII: Attaching Side Cover Clips

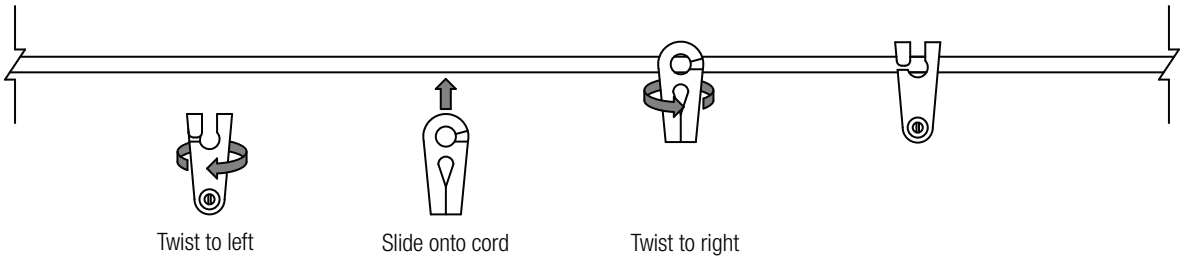

Diagram XVIII: Side Cover Attachment At Door

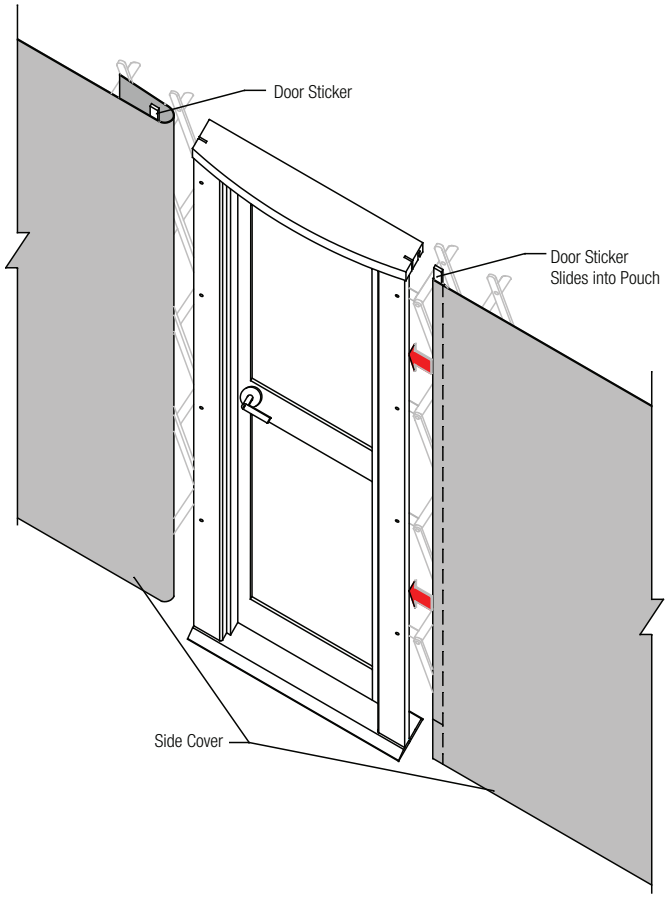

©2017 Pacific Yurts Inc.

Notice that the vinyl windows are purposely oversized a little. This allows for natural shrinkage of the vinyl over time. If you purchased window twist locks, gathers will be present until the shrinkage occurs. You should distribute the excess into several small gathers (rather than one large gather) in order to achieve a proper seal.

Note: If a tighter seal between the side cover and the plywood drip edge is desired, foam weather stripping (available at local hardware store) can be used. To install, adhere the foam to the drip edge at the grommet line and drive the screws through it when securing the side cover.

8. Fasten the bottom of the side cover to the drip edge at the grommets using #12 x 1" Phillips head screws (included in the hardware box) as shown on ***Diagram XIX.*** A variable speed electric drill with a Phillips head driver works well for this and saves a lot of time. Keep the side cover an even distance from the bottom of drip edge for a good appearance. If the wall insulation is hanging below the side cover you will need to pull it up from inside the yurt before installing the screws. **Note:** Bottom of side cover should end up below the interior floor.
9. Be sure the side cover fabric hanging **below** the floor level at the door frame is folded neatly and pulled through the notch in the door threshold, then put a screw through it into the drip edge to create a good seal.
10. If you have wall insulation adjust the window sections to match the windows on the side cover, then remove all 'S' hooks. Secure the insulation window and wall sections to the steel tension cable with a few evenly spaced plastic cable ties (from hardware box). It is not necessary to use a cable tie on **every** grommet.
11. Slide the door clamp fascia boards back into the door frame to cover the wing nuts and provide a finished appearance.
12. Roll up the window flaps to create a drip edge for water runoff. Be sure to roll them **under** so that the runoff from the roof does not collect there. For privacy, most people install curtains or louvered blinds on the **inside** of the yurt rather than utilize the flaps for this purpose. For those times when you do want to drop the window flaps, they are zippered along the sides.

Note: When clear vinyl windows have been removed, do not stack them and leave them in the sun. See care recommendations in the back of this manual. UV web frames are available from Pacific Yurts if you are in a high UV area and wish to protect the Velcro (on your side cover) while the vinyl windows are off.

Custom Curve Glass Window

If you purchased Custom Curve glass windows it is now time to finish the installation. Please refer to the separate instruction flyer. If you did not purchase the glass windows go to page 28.

©2017 Pacific Yurts Inc.

Diagram XIX: Securing The Side Cover

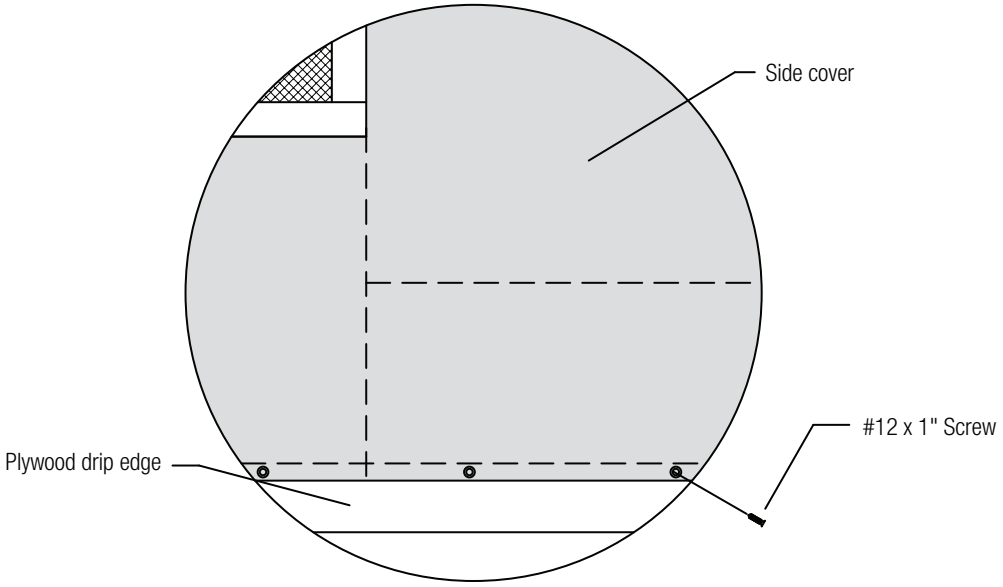

©2017 Pacific Yurts Inc.

Top Cover Valance

1. Fold down the top cover valance (the portion of the top cover that overhangs the side cover). If you have our standard top cover you will have pairs of grommets on the underside of the valance hem where a cord has been pre-installed. If you purchased our premium (Heavy Duty) top cover you will have pairs of grommets along the bottom of the valance, but no pre-installed cord. Lacing cord has been provided in your hardware box to lace through the valance grommets horizontally around the circumference. Make sure to lace it so the majority of the cord is visible on the outside of the valance. With either top cover you will need to install eye screws (included in hardware box) in the edge of the door frame (level with cord in the valance hem) for securing the ends of the cord.
2. Pull the cord as tight as possible and tie it securely to the eye screws. This cord cinches the top cover valance tight against the wall for a good seal.
3. Using the seam sealer provided (in hardware box) coat the sewn seam, which connects the roof overhang (valance) to the top cover. (This is not necessary on Premium [Heavy Duty] top covers.) This must be done when the covers are dry and clean and it is best to do immediately after the top cover is installed.
4. It is also recommended to apply a coat (of seam sealer) to the seam at the top of the window flap (except on vinyl side covers).

If you purchased a door awning a local carpenter will need to build a frame to support the awning. Pacific Yurts can provide some ideas for this. If your yurt has a rain diverter over the door now is a good time to install the PVC pipe inserts.

1. Slide the PVC inserts into the pockets to make an inverted “V” over the door. The fabric strip can then be pulled down and attached under the rain diverter to secure the PVC into the pocket. ***(See Diagram XX)***

©2017 Pacific Yurts Inc.

Diagram XX: Rain Diverter Inserts

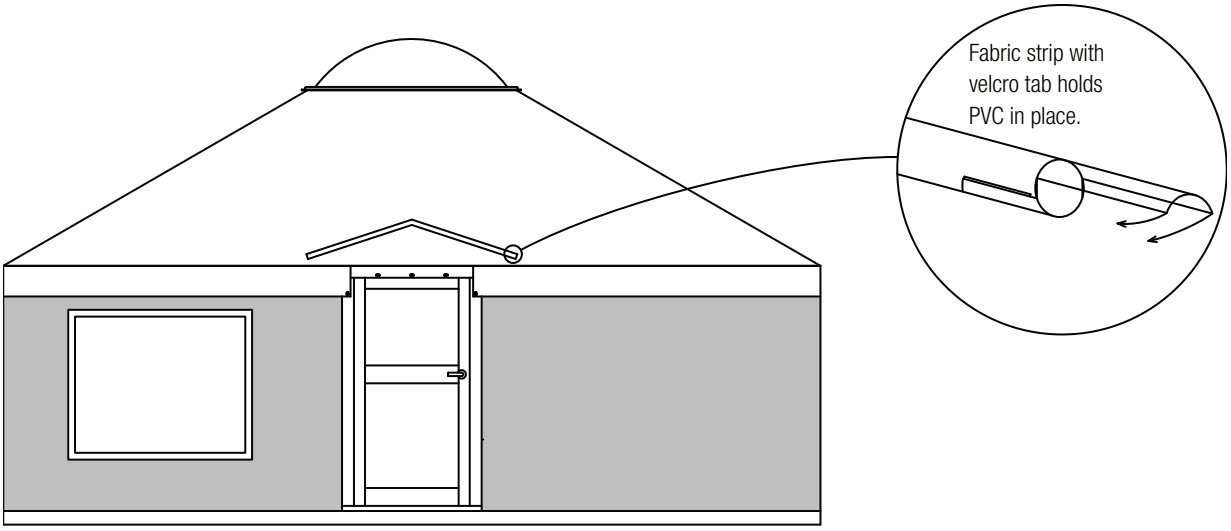

©2017 Pacific Yurts Inc.

Dome Skylight

Dome Skylight (Without Opener)

If you purchased the dome opener option go to next section for installing the dome skylight. If you do not have the dome opener option continue.

1. Lay a blanket or cardboard on the top cover to protect it when sliding your dome skylight into position.
2. Working from scaffolding or a step ladder in the center of the yurt, toss a strong cord or rope to a helper outside the perimeter of the yurt and have them tie it to two of the eye bolts inside the dome.
3. Have the person at the perimeter set the dome on the blanket or cardboard so you can pull the dome up the roof of the yurt to the center ring (using the cord) then remove the cord.
4. Line up the hooks on the center ring with eyebolts on the dome and snap the hooks on ***(see Diagram XXI)***. Be sure to align the numbers on the dome with the numbers on the ring.

Dome Skylight (With Opener)

Note: If you purchased a fan support you should install it prior to installing the dome skylight (instructions are in hardware box).

1. Lay a blanket or cardboard on the top cover to protect it when sliding the dome into position.
2. Working from scaffolding or step ladder in the center of the yurt, toss a strong cord or rope to a helper outside the perimeter of the yurt and have them tie it to two of the eye bolts inside the dome.
3. Have the person at the perimeter set the dome on the blanket or cardboard so you can pull the dome up the roof of the yurt to the center ring (using the cord) then remove the cord.
4. Align the aluminum bracket on the dome skylight with the aluminum bracket on the center ring and attach the three springs to the eyebolts on the dome.
5. Attach the dome opener (threaded chrome spindle) by removing the thumbscrew on the aluminum dome bracket and aligning the hole in the brass core of the spindle with the thumbscrew and securing the thumbscrew again. ***(See Diagram XXIII on page 33)*** The brass core will attach onto the thumbscrew **between** the two plastic spacers. **Make sure the inner brass core of the spindle is screwed all the way into the chrome portion.**
6. Loosen the bracket bolts on the center ring's aluminum bracket and align the holes in the chrome hub with these bolts. **It is very important that the brass core remains all of the way inside the chrome spindle as you do this.**
7. Tighten the ring's bracket bolts so they hold the chrome hub in position. ***(See Diagrams XXII and XXIII)***
8. Crimp the ends of the springs closed with a pair of pliers so they don't pull off the eyebolts.
9. Attach the short safety cables to the eyebolts on the dome. ***(See Diagram XXIII)*** The safety cables will help hold the dome even if the wind stretches your springs. **Note: Be sure to keep the dome closed when you leave the yurt or during high winds.**

EXTREMELY IMPORTANT: When closing the dome skylight the opener should not continue to turn once the dome is closed. It should bottom out, which prevents overtightening that can result in a cracked or broken dome. If opener does not bottom out, it is installed improperly and should be removed and reinstalled per instructions above.

©2017 Pacific Yurts Inc.

Diagram XXI: Non-Opening Skylight

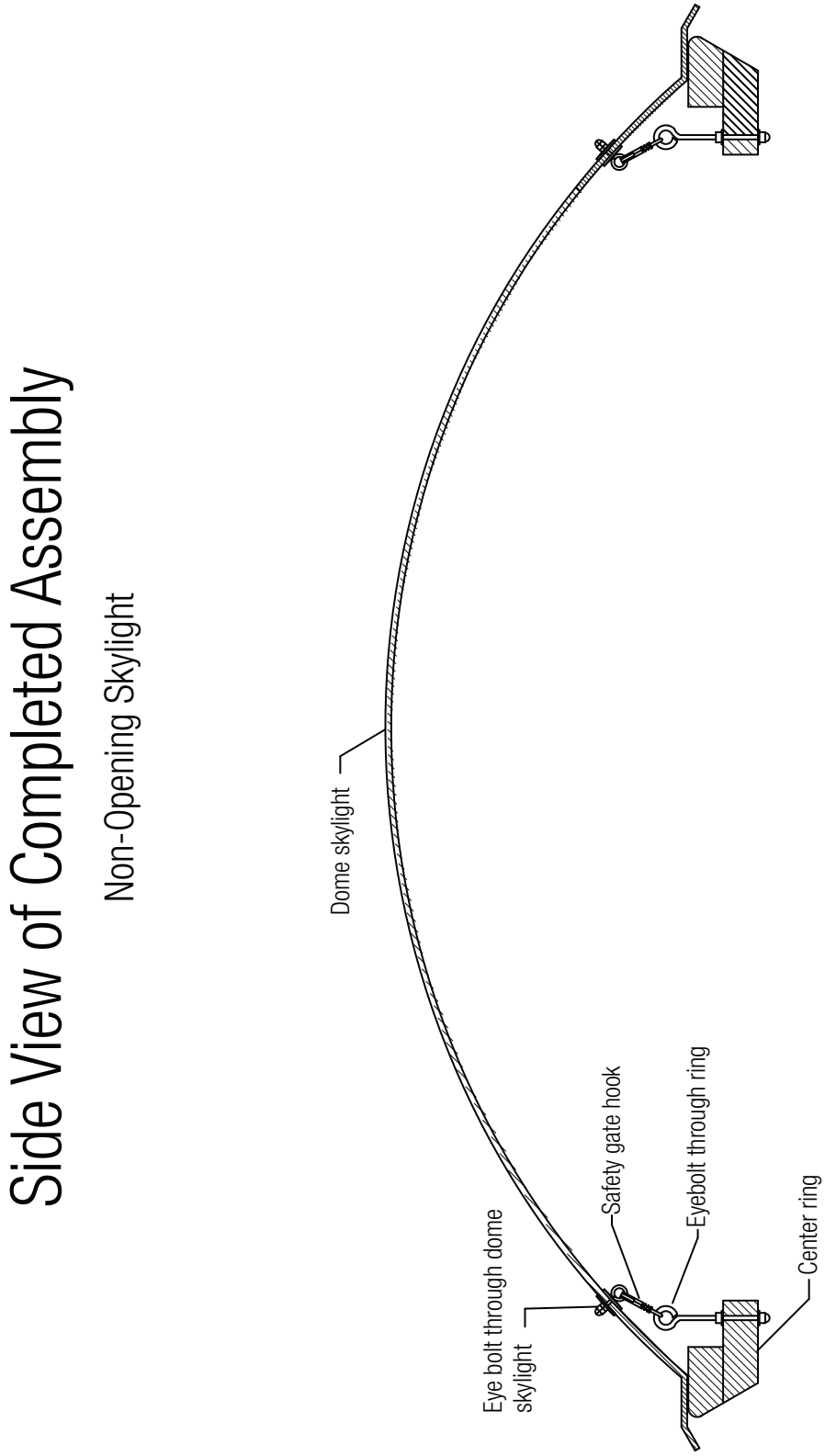

©2017 Pacific Yurts Inc.

Note: The dome opener option is used not only to vent out excess heat, but also to vent moisture. The key to avoiding condensation is ventilation! Any time moisture is introduced into the yurt (by cooking, wet clothes or even breathing) it should be vented back out. Since warm air can hold more water vapor than cold air it is best to heat the yurt, then open the dome skylight on a regular basis to vent excess water vapor. This will minimize or eliminate condensation in the yurt.

Diagram XXII: Dome Opener Spindle

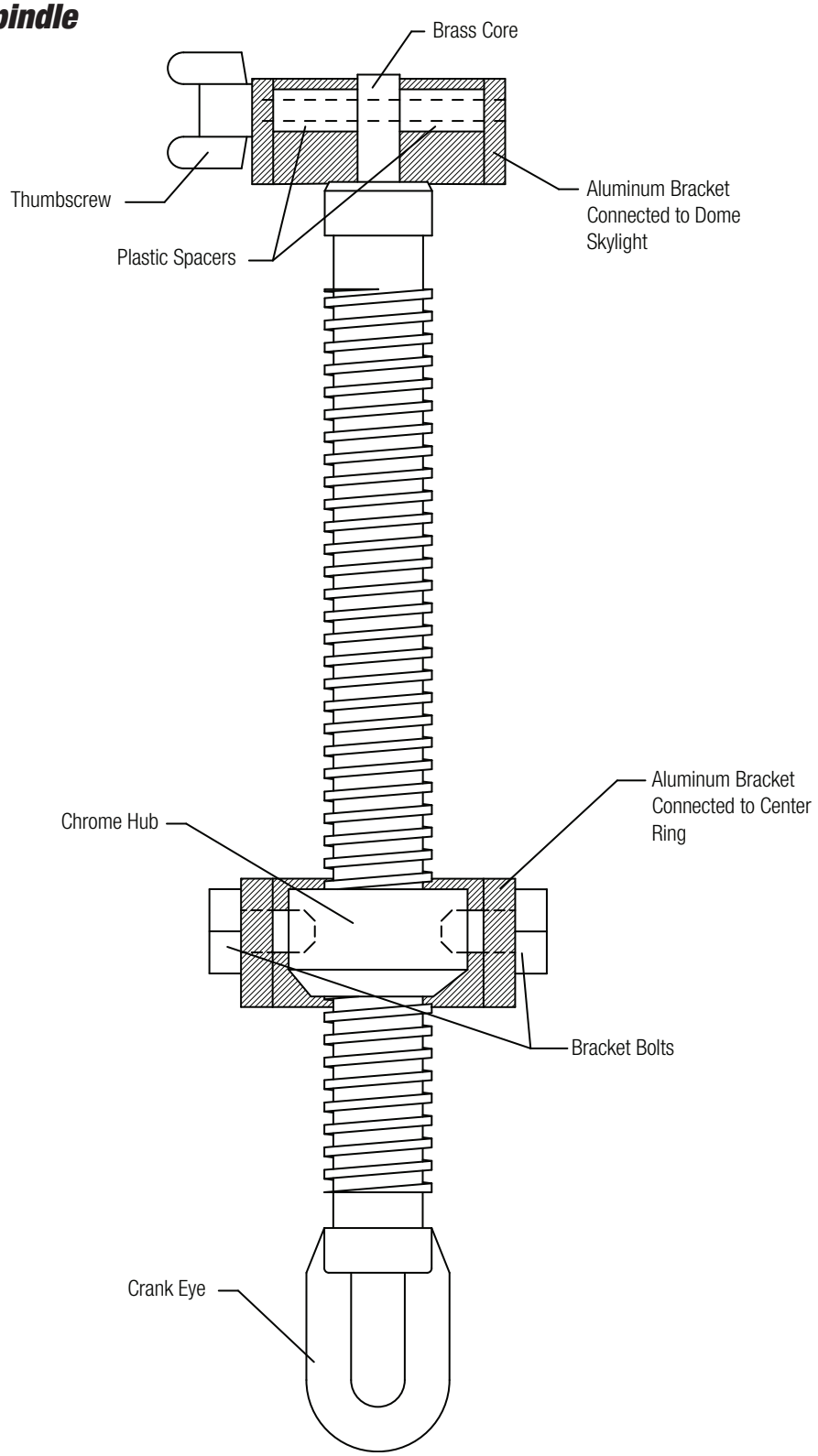

©2017 Pacific Yurts Inc.

Diagram XXIII: Opening Skylight

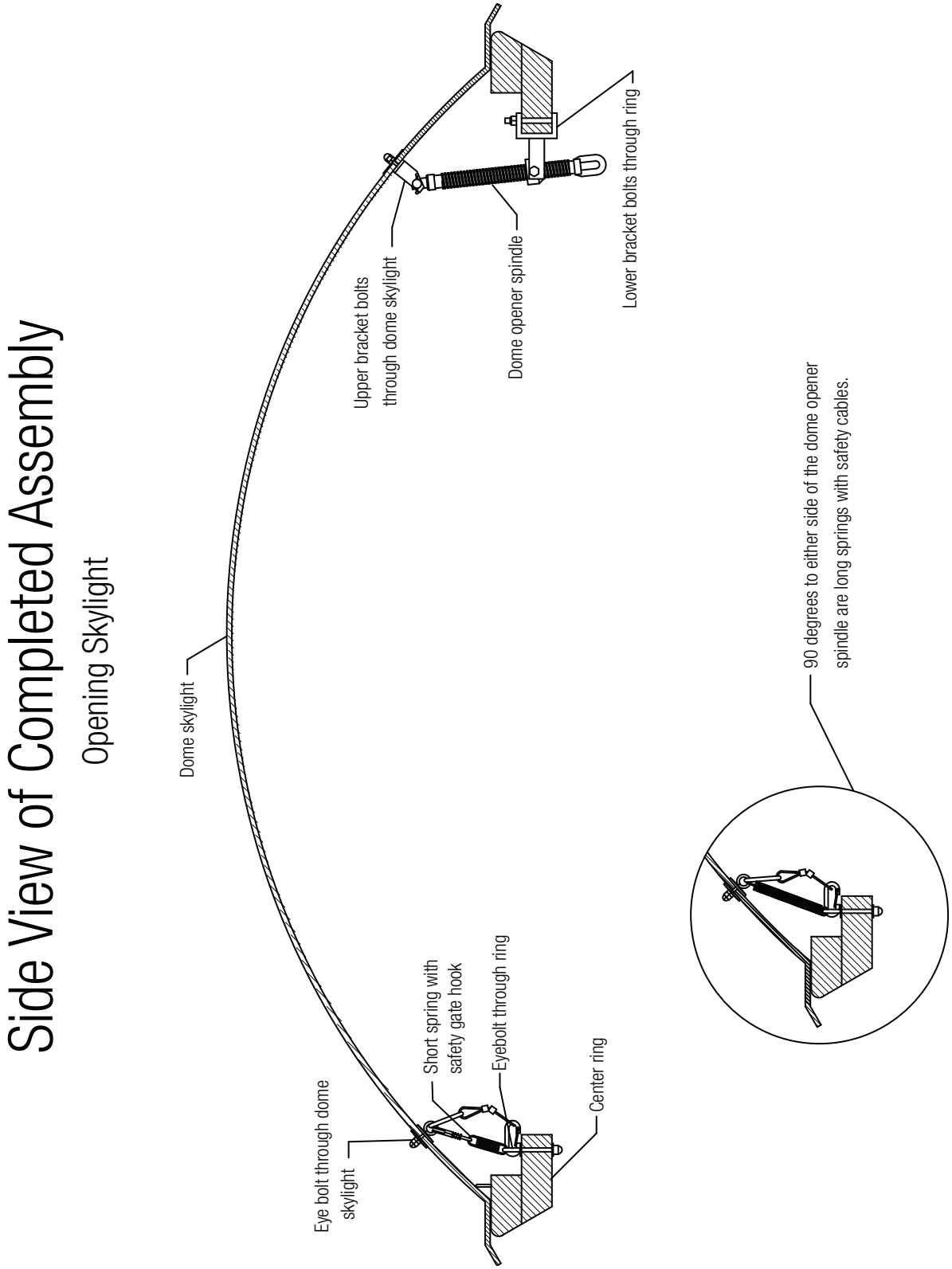

©2017 Pacific Yurts Inc.

Stovepipe Installation

There are various ways to heat a yurt. Most conventional heating methods work, but may require advance planning and consultation with your heating specialist. The size of heater you should choose is relative to the yurt size, weather conditions and if the yurt is insulated or not. Usually larger is better.

Choose your stove carefully. A large, quality airtight woodstove puts out uniform heat over a long period of time, which is to your advantage. Consider the total volume to be heated and the fact that the yurt has a higher rate of heat loss than a typical insulated house of the same size. Make-up air for the woodstove may be provided through a vent in the floor adjacent to the stove if needed. A ceiling fan or fan mounted near the stove will help to circulate heat throughout the interior.

1. Locate your stovepipe on the side of the yurt where prevailing winds will carry the smoke and ash away from the roof. Once the location is determined, cut the lattice wall using a hand saw according to fig. 1 ***(see Diagram XXIV)*** leaving a diamond-shaped opening in the lattice wall.
2. Center the six-sided interior flashing over the exit hole. If you have the Snow & Wind Kit you should check to see if the center hole is at least 2" from the nearest rafter support. If not, adjust it to the left or right so that you have at least 2" of clearance from the rafter support and lattice wall. Using a pencil, trace the flashing's center hole onto the side cover (or wall insulation) and remove the flashing. This is where the insulated stovepipe will penetrate through the wall of the yurt. Using this circle as a reference, draw a larger circle with a radius that is 2" larger ***(see fig. 2, Diagram XXIV).*** This is where the side cover and insulation material will be cut so that none of the material is closer than 2" from the insulated stovepipe.
3. Using a sharp pair of scissors, cut and remove the (larger) circle of fabric.
4. Notice that the two pieces of flashing have a thin protective coating on one side. You can now peel this coating off and attach the interior flashing by using the screws provided. Be sure to drill pilot holes to avoid splitting the lath.
5. Attach the rectangular exterior flashing in the same manner by screwing through the side cover into the lattice wall making sure the opening is exactly lined up with the hole in the interior flashing. Once again, be sure to drill pilot holes first. The top of the flashing should be slipped under the top cover valance (roof overhang) to act as a shingle for protection against leakage.
6. The stovepipe penetrating through the wall of the yurt, along with any exterior piping, should be Metalbestos pipe or equivalent insulated pipe that is rated at 2" clearance from the nearest combustible surface. The Metalbestos system must be well supported and needs to have only a few inches of clearance from the side cover. A spark screen should be used at the top of the chimney.
7. Install the woodstove on a fire-proof base **following the stove manufacturer's guidelines for specific clearances from combustible surfaces. Note:** The clearances shown on ***Diagram XXV*** are examples. Single-wall stovepipe can be used up to the exit flashing, where a Metalbestos or equivalent (insulated) pipe is inserted through the flashing to safely vent the hot gases through the side cover.
8. The exterior chimney, made from insulated stovepipe, is typically supported by two 4x4 posts mounted adjacent to the yurt. Plan for the posts to be 14"-16" from the wall of the yurt and 8" apart and then dig a hole of sufficient depth to provide the necessary stability. The depth can vary depending on the height of the posts, soil conditions and whether frost heave will be an issue for your site.
9. Set your posts into concrete.
10. The cleanout tee is a 90 degree section of pipe that includes cleanout access. This will be supperted by a chimney wall support kit, which is essentially a shelf made from sheet metal that will bolt directly to the 4x4 posts. Anchor the support kit to the 4x4 posts.

©2017 Pacific Yurts Inc.

11. Attach your straight sections of chimney stovepipe onto the cleanout tee. Your top section of pipe should include a chimney cap.
12. The wall band is a metal strap that fastens around the the chimney stovepipe and bolts to the 4x4 posts to secure the upper portion of the chimney. The wall band should be fastened high enough onto the 4x4 posts so that it is fastened onto the uppermost section of piping.

Direct Vent Gas Stove Installation

The installation procedure for a gas stove will be the same as with a woodstove, except the exterior chimney will not be necessary. Instead of a cleanout tee a gas stove will have a termination cap that mounts directly onto the exterior stove flashing. ***(See Diagram XXVIII}***

IMPORTANT NOTE: These recommendations should only be used as guidelines. To obtain more details about a safe and sensible installation in your area, and to comply with all local fire regulations, we recommend that you contact your local Fire Marshal. Safety is the best fire insurance.

Diagram XXIV: Stovepipe Hole

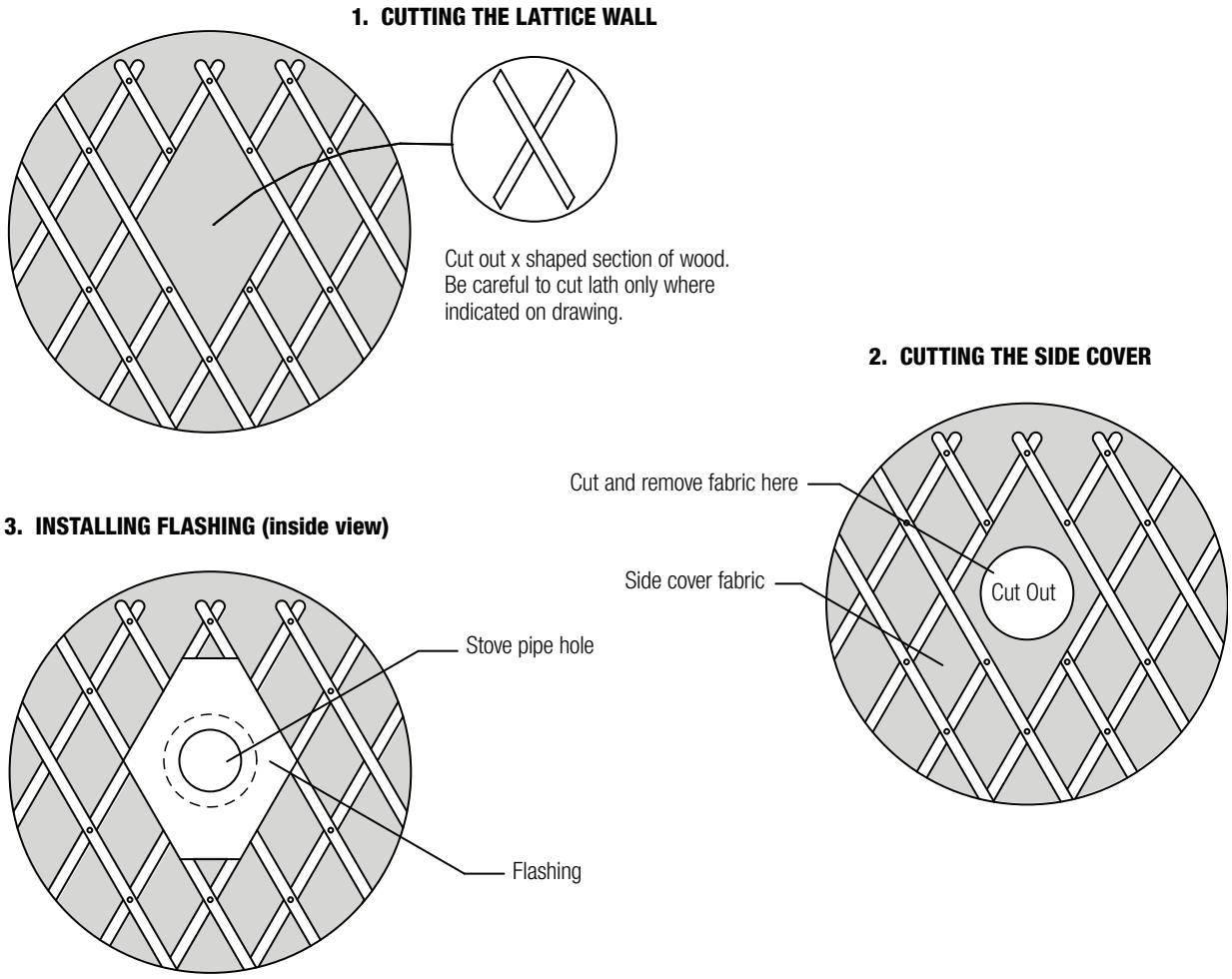

©2017 Pacific Yurts Inc.

These recommendations should only be used as guidelines. To obtain more details about a safe and sensible installation in your area, and to comply with all local fire regulations, we recommend that you contact your local Fire Marshal. Safety is the best fire insurance. Follow stove manufacturer's recommendations for clearances from combustible surfaces.

Diagram XXV: Woodstove & Chimney Installation

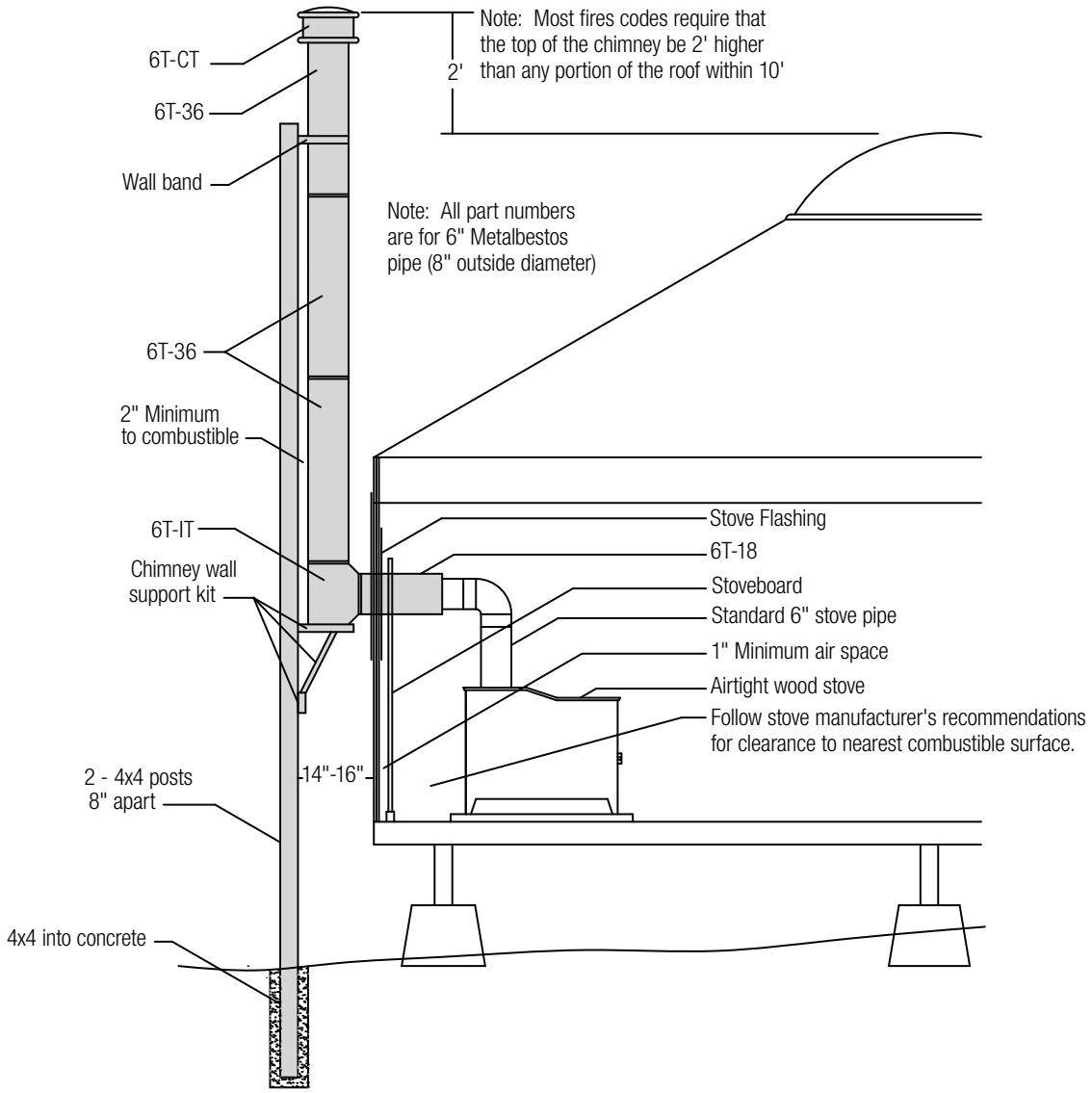

©2017 Pacific Yurts Inc.

These recommendations should only be used as guidelines. To obtain more details about a safe and sensible installation in your area, and to comply with all local fire regulations, we recommend that you contact your local Fire Marshal. Safety is the best fire insurance. Follow stove manufacturer's recommendations for clearances from combustible surfaces.

Diagram XXVI: Gas Stove Installation

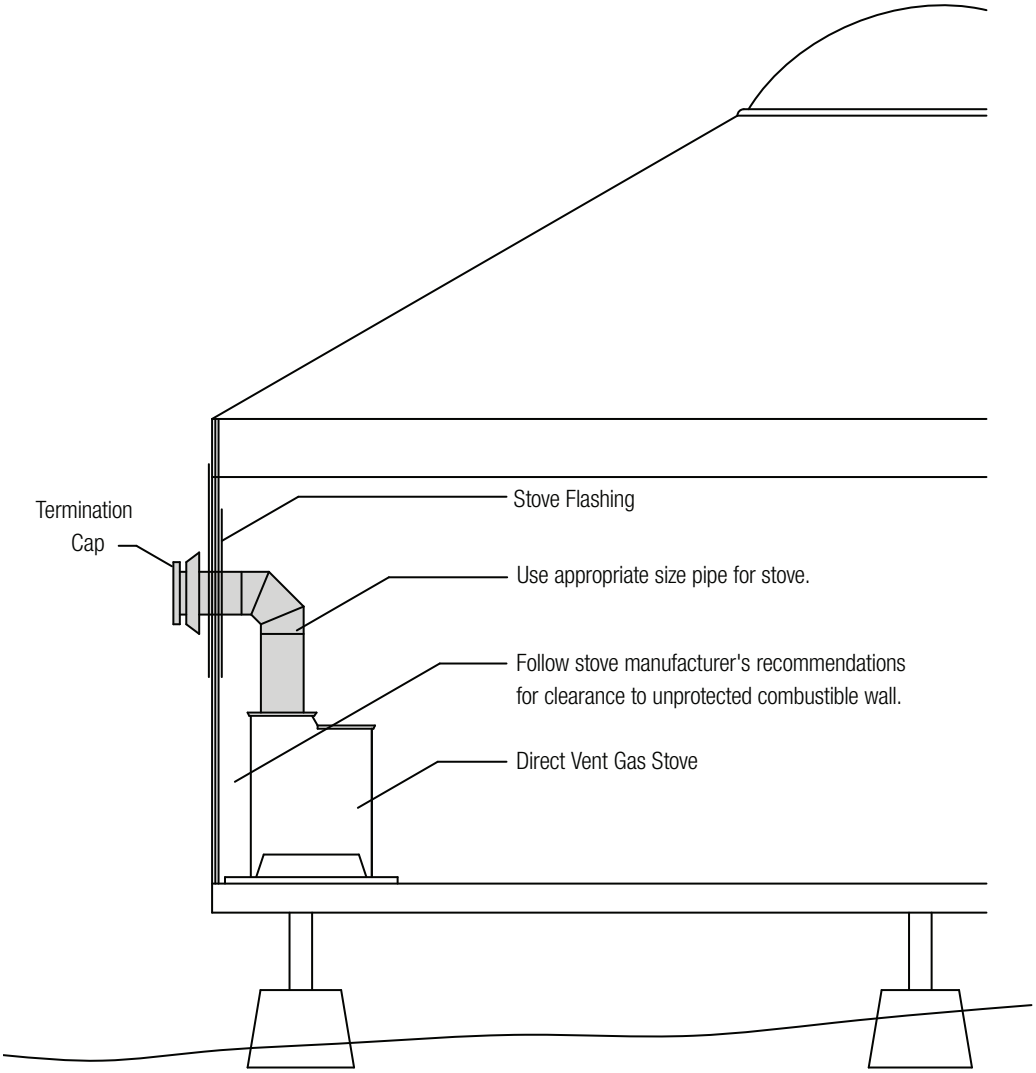

©2017 Pacific Yurts Inc.

Additional Insulation Information

Insulating The Roof With Insulation Board

1. Use the dimensions on the ***Diagram XXVII*** to lay out a full-scale pattern on a piece of cardboard. Cut the pattern out and use it to check the fit between rafters. Make sure to space your rafters so that the center of the rafter is exactly at the center of its respective crotch when determining the fit of your sample pattern. Check several locations. You may have to make slight adjustments, since the hole spacing in the center ring (for the rafter pins) sometimes varies slightly.
2. Place your pattern on a sheet of insulation board. With a **sharp** knife trace the pattern on the board and then remove the pattern and finish cutting the panel. The remaining short pieces can be cut out of scrap and taped on using duct tape or glued on using a construction adhesive.
3. If you are using an insulation material that is not rated for exposed insulation, it is important to cover it with a flame-retardant fabric before installing it, or install a flame retardant liner onto the underside of the rafters to cover the insulation.
4. Either quarter round, 1” x 2” or some other molding fastened along the bottom edge of the rafters will hold the insulation panels in place.
5. The rafters can be spread apart to allow easy installation of the panels. The last panel can be installed by loosening the top cover and inserting from the outside.

YURT DIAMETER	TOP PANELS REQUIRED	# OF 4 x 8 SHEETS REQUIRED
12’	20	5
14’	24	6
16’	28	7

©2017 Pacific Yurts Inc.

Diagram XXVII: Insulation Board Pattern

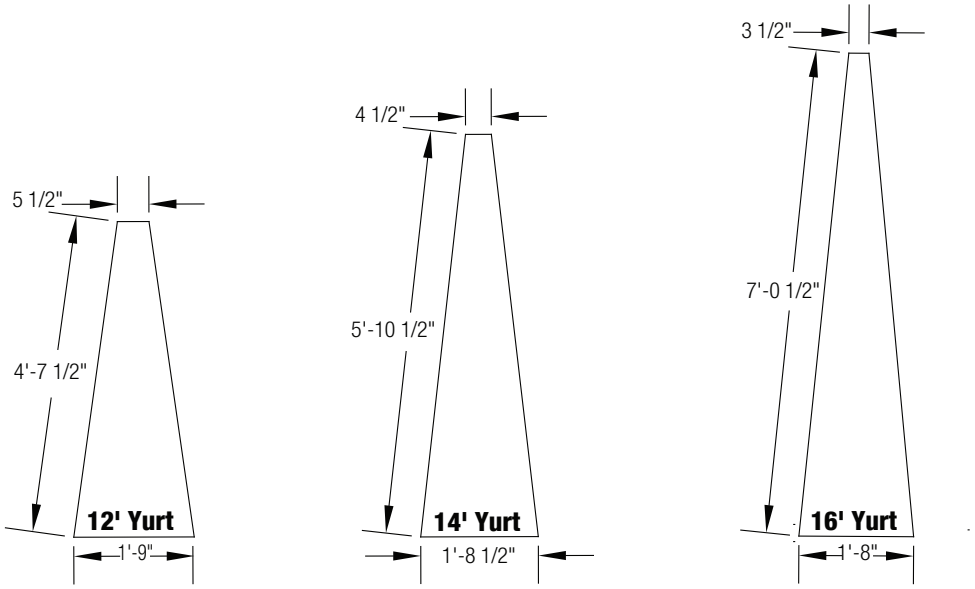

Floor Insulation

For optimum comfort it is desirable to install insulation under the floor. Reflective insulation is easily installed and available from Pacific Yurts in 4’ wide rolls. It can be stapled between the 4” x 6” joists or to the bottom edge. Rigid foam insulation board is also recommended and can be cut to fit between the joists and supported with protruding nails or wood strips used as stops. Alternatively it can also be nailed to the underside of the joists in full sheets and trimmed at the perimeter joists. Use large head simplex nails or lath strips when nailing so that the insulation board is firmly attached and will not work itself loose. Standard fiberglass roll insulation also works when wire mesh or equivalent is used to support and protect it. Even so, certain nesting creatures find this material attractive for their nests and this could reduce its effectiveness.

©2017 Pacific Yurts Inc.

Additional Options

Door Screen Curtain

Notice that the screen curtain is made in two pieces that will overlap in the middle.

1. Take one of the halves and hold it up to the inside (for an outward opening door) of your door frame so that the weighted end hangs just above the door threshold and the right side is even with the outer edge of the door frame. Using staples or thumbtacks, secure it to the inside of the top door sill.
2. Now take the other half of the curtain and hold it up to the inside of the door frame so that the weighted end hangs just above the door threshold and is even with the left side of the door frame. Secure it just as you did the right side.
3. Trim excess screen above the top door sill. For a clean, finished appearance a strip of molding can be screwed over the staples or thumbtacks.

Center Ring Insert

The center ring insert should be installed after the entire yurt has been set up.

1. Using a step ladder in the center of the yurt, slip the center ring insert into the underside of the center ring. Be sure the side of the center ring insert that has the screen (or fabric) attached to it faces up. The center ring insert has been made to install around the dome opener bracket, so also be sure to line up this opening with the bracket.
2. Once it is in place, screw the center ring insert to the center ring in the predrilled locations with the screws provided.
3. If the center ring insert has screen, a screen patch has been included for installation to the underside of the center ring insert at the dome opener spindle location. It can be secured with staples, tacks or an adhesive. Before attaching it, mark and cut a small “x” for the dome opener spindle to protrude through.

Insulated Window Cover

Pacific Yurts’ insulated window covers are designed to attach to the buckles under the window flap (on the outside of the yurt) and block off the window, providing better heat retention during cold conditions. Notice that one side of the insulated window cover has an ivory colored liner fabric on it. This provides an attractive appearance once the window cover has been installed.

1. From outside the yurt, unbuckle the window flap and let it unroll. Notice that when this is done the male-end buckle under the flap is not being used. This is where the insulated window cover will be installed.
2. Clip the female-end buckles on the insulated window cover to the male-end buckles under the window flap so the ivory colored liner faces the yurt and the foil faces out.
3. Lower the window flap and zip it closed.

©2017 Pacific Yurts Inc.

Diagram XXVIII: Water Catchment System

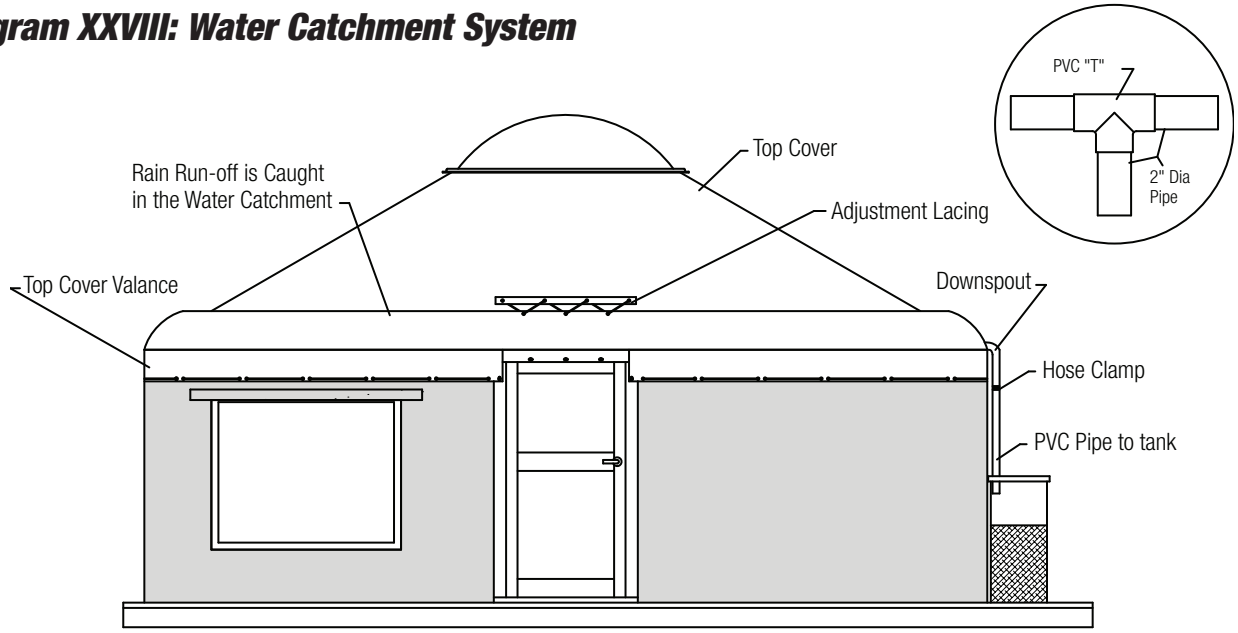

Water Catchment System

The yurt should be completely installed according to this manual. If the yurt has an awning, roll it up and secure it so it is out of the way. The water catchment system is essentially a second valance on the top cover that will be folded upward to create a gutter.

1. Go around the yurt and fold the outermost valance (water catchment) upward onto the roof. Notice that the water catchment has a cord installed into the hem, which has cut-outs approximately every eight feet.
2. Carefully pull the cord in the rim hem to tighten the circumference. Tightening the cord evenly around the perimeter will create the fabric gutter. Be sure not to tighten the cord too much. It just needs to be tight enough to make the circumference smaller than the circumference of the yurt.
3. Tie the cord in a knot so the gutter will hold its shape.
4. Using the PVC cement provided, glue the 6” long sections of 2” diameter pipe into the PVC “T” (see diagram - upper right).
5. Insert the PVC “T” assembly into the downspout. This will prevent the downspout from pinching off the water flow.
6. The sections of larger diameter (4”) pipe are provided for placing horizontally in the fabric gutter (evenly spaced) around the perimeter to hold the fabric gutter away from the roof.
7. Notice that the top cover has one or more (larger yurts have more than one) strips of grommeted fabric welded above the fabric gutter.
8. Using the nylon lacing cord provided, lace the grommeted strip to the corresponding grommets on the fabric gutter. This is the adjustment lacing. By tightening or loosening it you can control the water flow toward the downspouts.
9. Using a hose clamp, fasten a length of 2” diameter pipe (available at local hardware store) into the downspout and run the pipe into your water storage container.

Note: Installing 1/2” diameter PVC pipe into the rim hem to create a continuous rigid rim on the water catchment will make the catchment system function better and look nicer. This may be purchased at a local hardware store.

©2017 Pacific Yurts Inc.

Removable Cable Tie-Down System

If this option was purchased there will be four eyebolts installed in your center ring for the Cable Tie-Down to attach to.

1. Locate and mark the exact center of yurt floor.
2. Drill a 9/16” hole completely through the flooring at this center mark.
3. Cut a piece of 4x6 to fit between the existing beams under the floor at the center point and secure it into position.
4. Drill the 9/16” hole completely through the 4x6 block. This 4x6 will ensure that the cable tie-down system is securely fastened to your platform. ***Note:*** Counter-sink the hole in the flooring 2” deep using a 2” drill bit to avoid a trip hazard.
5. Install the large eyebolt provided through the hole and secure with the large washer and nut. ***(See Diagram XXIX)***

The cable tie-down has a steel ring with four shorter cables and one longer cable attached to it. The four shorter cables have carabiners. The longer cable has a turnbuckle in the middle of it.

1. Clip the four carabiners to the eyebolts installed in the center ring. The longer cable should hang down to the floor.
2. Remove the cable clamps at the bottom of the long cable and thread the cable through the large eyebolt in your floor.
3. Pull the cable tight, secure the cable clamps and trim any excess cable. **Note:** If the Cable Tie-Down is left in place be sure to check the cable clamps regularly making sure they are tight.
4. Use the turnbuckle to tension the Cable Tie-Down by twisting the center hub until the cables start to pull the center ring downward. **Do not cinch it down tight, just snug!**

To remove the cable tie-down, loosen the turnbuckle, unclip the carabiners from the center ring and remove the cable clamps.

©2017 Pacific Yurts Inc.

Diagram XXIX: Cable Tie-Down System

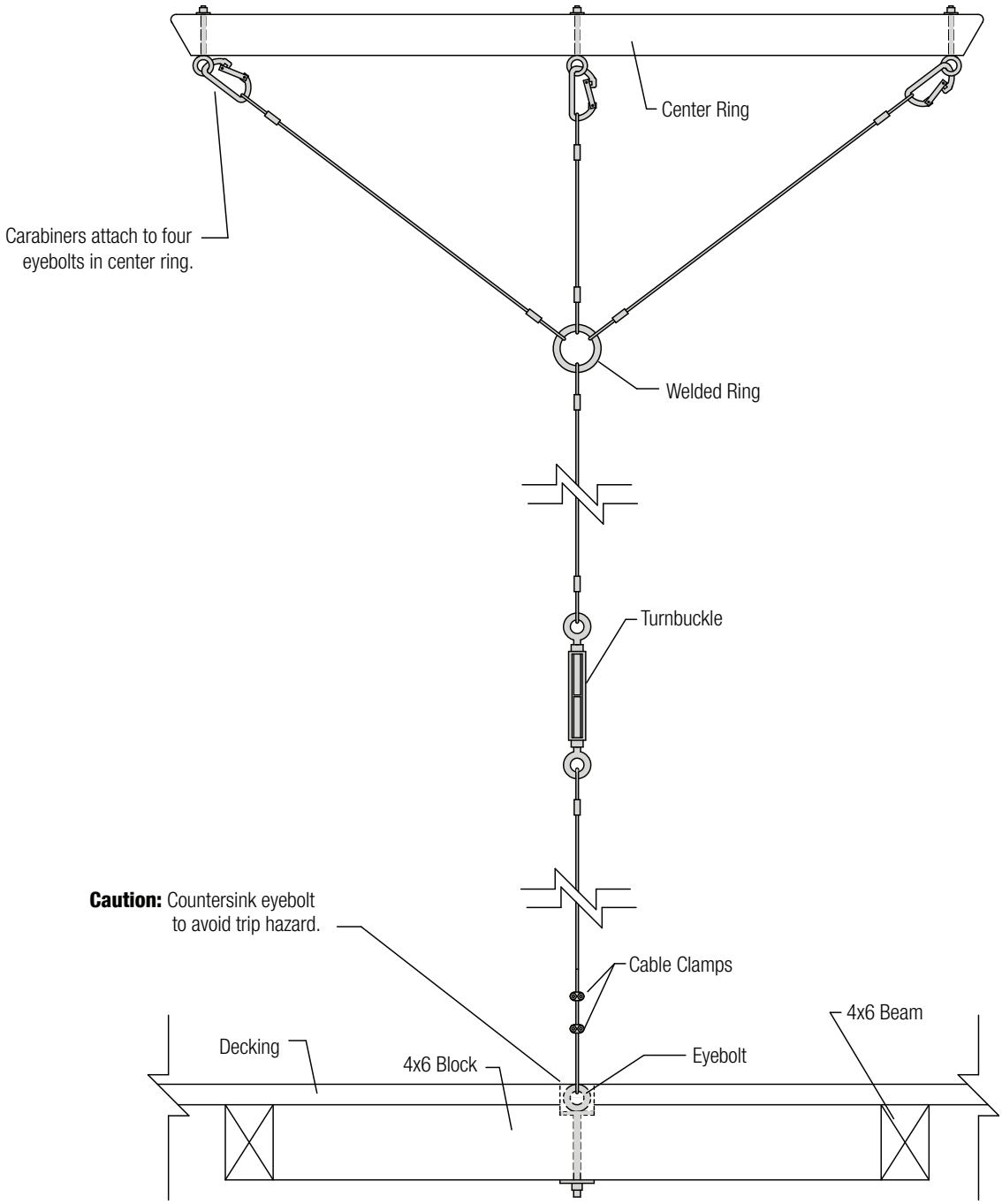

©2017 Pacific Yurts Inc.

Perimeter Gutter System

The yurt should be completely installed prior to installing the perimeter gutter system.

1. Loosen the valance cord and fold the top cover valance upward onto the roof of the yurt to expose the connection between the top cover and side cover. There should be a gap of approximately 1” where this connection occurs. This is where the hanger brackets will be installed.
2. Slip the angled end of the hanger bracket under the top cover so that it matches the angle on the rafter ***(see Diagram XXXI).*** In order to do this you will need to carefully cut a horizontal slit through the inner valance on your top cover (using a razor or utility knife) wide enough for the aluminum bracket to slide through. **Note:** If you have roof insulation the bracket should go between the top cover and foil insulation.
3. After aligning the bracket with the end of the rafter drill pilot holes into the end of the rafter. **Failure to drill pilot holes can result in split rafters, which can weaken the yurt.** Using the screws provided secure the hanger brackets to the ends of the rafters ***(see Diagram XXXI).*** Fasten hanger brackets onto all rafters except rafters over the door(s).
4. Starting with the end of a gutter section approximately 6” from the left side of the door frame snap the gutter section into the hanger brackets going clockwise around the yurt. The sections of gutter are interchangeable, so they do not have to be installed in a particular order. The hanger brackets should end up approximately in the center of straight gutter segments.
5. Decide where you want your center drop(s) and down pipe(s) to be. Whenever possible try to locate the center drop opposite the door or near the midpoint of the gutter (large yurts have multiple center drops). Remember that if you place a center drop over a window your down pipe will be in front of the window and make it difficult to access for ventilation.
6. Cut the gutter where the center drop is to be placed so that the edge of the center drop is at least 2” from the nearest joint and does not interfere with the hanger bracket ***(see Diagram XXXII).*** You will need to cut out a 1”-2” section of the gutter that will be centered in the center drop.
7. Cut the ends of the gutter (by the door) to remove the molded end and so that the gutter ends approximately 6” from the edge of the door frame. Having the gutter too close to the door will create a long unsupported end section that will not drain properly. The molded ends have to be cut off so that the end caps can be installed.
8. Using the cement provided, glue the sections of gutter together (follow instructions on tube) and rivet them using the 1/8” rivets provided. When riveting the sections together insert the first rivet from the outside of the gutter and apply a backup washer to the back of the rivet (on the inside of gutter) before ‘popping’ the rivet. The washer goes on the backside of the rivet to prevent it from working loose and coming out. Install a second rivet in the back edge of the gutter as well (from inside the gutter).
9. Glue the end caps into position.
10. After allowing the cement to fully set up, fold the top cover valance down into the gutter and re-attach the twist locks and valance cord at the door frame.
11. Attach the pipe holder to your platform’s drip edge below the side cover and secure the down pipe into the pipe holder and center drop.

©2017 Pacific Yurts Inc.

Diagram XXX: Gutter Parts

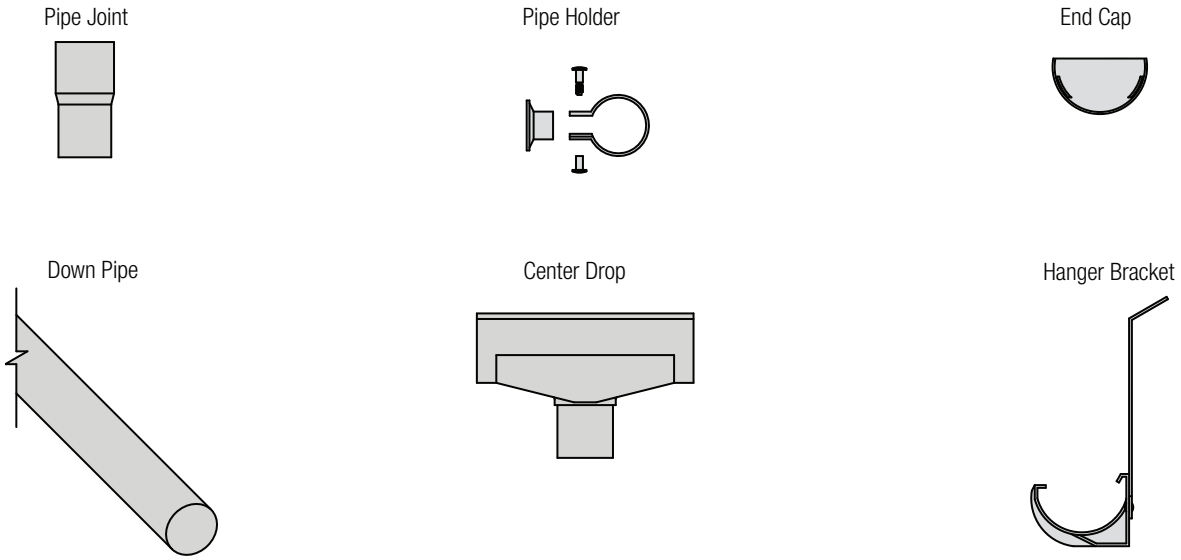

Diagram XXXI: Gutter Hanger Bracket

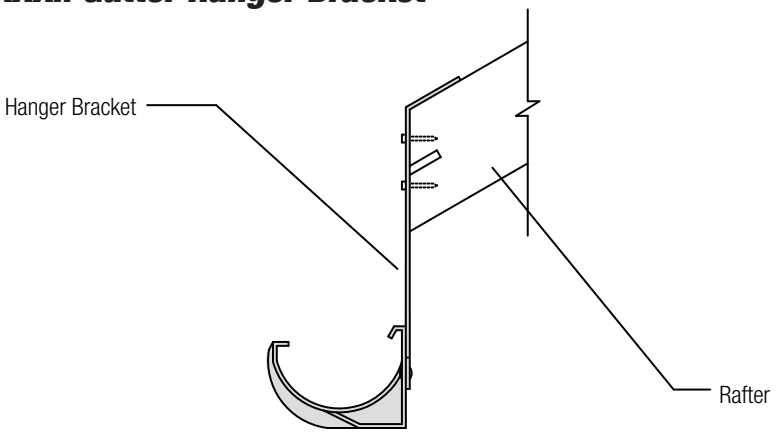

Diagram XXXII: Gutter Assembly

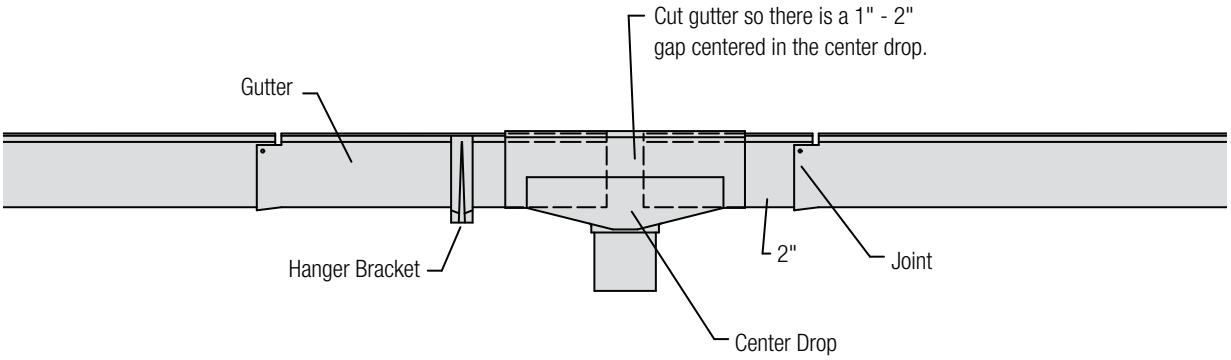

©2017 Pacific Yurts Inc.

Care & Maintenance

Vinyl Covers

As with any quality product, there are several cautions and care recommendations that must be observed to get the longest possible functional life from your fabric covers.

An accumulation of dirt or soiling can create an ideal environment for bacteria to grow and cause staining of the fabric. It is important that this be removed regularly to maintain appearance and longevity of the fabric.

The vinyl covers should be cleaned at least twice a year with a mild soap (Ivory soap) and warm water. We have found this to be the least aggressive to the fabric. Recommendations for cleaning include hand scrubbing with a soft bristle brush using a ladder around the lower perimeter areas and using the dome opening for access to the top areas. A swimming pool brush with an extension handle and hose attachment would be a good investment for this purpose. Be sure to protect the top cover before sliding the dome down to remove it. In areas where tree sap and leaves are a problem, it may be necessary to clean the top every few months. If mildew is ever found growing on the roof, it should be removed with soap and water. In the event the roof ever becomes torn, it can be repaired with a standard vinyl patch kit available from Pacific Yurts. Always be sure the covers are **completely dry** before storing them.

100% Polyester Side Covers

This material is also relatively maintenance free. It should be kept clean (see cleaning recommendations for vinyl covers above), never stored wet, and kept free of mildew much the same as the vinyl covers. The side cover may be treated with a clear water repellent if needed. This may be available through your local canvas or awning dealer. Be sure to follow instructions. Side cover should be clean and dry before applying water repellent. Seam sealer is also available.

Stove

A stove adds a comforting dimension to the yurt space, but along with it, the danger of fire. A cover treated with a fire retardant does not mean it is fire proof. **Safety is the best fire insurance.**

1. Clean stovepipe at regular, monthly intervals.
2. Keep stove a safe distance from any combustible surface!
3. Flashing is designed to receive 6” (inside diameter) Metalbestos (or equivalent) insulated pipe rated to be two inches from a combustible surface.
4. Invest in a small fire extinguisher. Fire is always a danger when woodstoves are used.
5. Seek advice from your woodstove dealer if you have any questions or **give us a call.**

©2017 Pacific Yurts Inc.

Lattice Wall

The lath is made from kiln-dried Douglas fir for its strength and resilient properties. Because of the nature of this wood a piece of lath may occasionally split or break even under normal usage. Replacement lath and rivets are available from Pacific Yurts.

If a piece of lath should break. . .

1. From the **outside** of the lattice (the side with the hole in the rivet), use a 1/4" bit to drill out the rivets on the broken piece of lath. When the rivet top is drilled off, **carefully** tap the bottom part out with a hammer and punch.
2. Replace broken lath piece by lining up the holes in the pieces of lath to be riveted and placing the bottom part of the rivet through the hole from the inside of the yurt. Put the top of the rivet into the bottom part and with a *rivet tool pop the rivet, being sure it is flush on the inside and outside of the lattice. Repeat these steps with the other holes.

***** Available at most hardware stores or rentals.

Adjusting The Door

If the door is not closing properly, it may not be hanging square. An easy remedy is to loosen the wing nuts on the door clamps, remove the screws anchoring the door frame to the rafters and floor then shift the door. Re-tighten the wing nuts on the door clamps and re-install the screws anchoring the door frame to the rafters and floor.

If the door appears to be bowing outward at one corner the frame may be out of alignment. To adjust this remove the screws anchoring the door frame to the rafters above it and push outward on one corner (at the top) of the door frame. Watch to see if the problem corner of the door is corrected or gets worse. If it seems to get worse when pushing on that corner you will want to push on the other corner. This will pull the corner of the door inward into proper alignment. Re-install the screws into the rafters to hold the door frame in proper alignment.

Door & Door Frame

All exterior wood should be re-coated with cedar semi-transparent (such as Superdeck 1901) or solid body stain or equivalent every year or as needed. Sand lightly or use deck cleaner before applying the stain. Note: Adding a covered porch or awning will protect the door and make the finish last much longer.

Lubricate door knob on a regular basis with graphite or Teflon based lubricant.

©2017 Pacific Yurts Inc.

Dome Skylight And Door Window

Wash acrylic dome and door window with a mild soap (dish washing liquid), plenty of lukewarm water and a soft cloth. Rinse with clear water. Never use paper towels or other paper products, which tend to scratch the surface finish. Novus plastic polish or equivalent and a soft cloth can be used to polish the acrylic surfaces.

To remove grease, oil or tar, use a good grade of hexane or kerosene. Immediately wash away oily film residues with a mild soap and water solution.

Do not use window cleaning sprays or solvents. Alcohol may cause crazing (many small cracks).

Vinyl Windows

Always roll the vinyl windows, as folding them makes creases that impair vision and weaken the material. Rolling them with a clean cotton towel reduces the possibilities of scratches. Clean the windows with a soft cloth and warm soapy water. Novus plastic polish or equivalent and a non-abrasive cloth can be used to polish the vinyl windows. These surfaces scratch very easily with even the finest dust, so hose off dirt before cleaning. Never use paper towels or newspaper when cleaning the windows. When vinyl windows have been removed, do not stack them and leave them in the sun. **Note:** UV web frames are available from Pacific Yurts if you are in a high UV area and wish to protect the Velcro (on your side cover) while the vinyl windows are off.

©2017 Pacific Yurts Inc.

Glossary

Carabiner – Oval or “D” shaped clip typically made of aluminum or steel and used for rock or ice climbing. They are designed to be strong, light weight and easy to clip and unclip.

Clamp – See door clamp.

Countersink – To drill or shape a depression, as at the top of a hole, for the head of a screw or bolt.

Crotch – Where two pieces of lath come together to create an “X” at the top of the lattice wall.

Door clamp – Wooden board on the inside of the door frame that clamps the door sticker and side cover against the door frame.

Door clamp fascia – Wooden board about the same size as the door clamp that slides into grooves in the door sills to hide the wing nuts.

Door Header – The horizontal wooden board that makes up the top of the door frame.

Door Sticker – Piece of lath (without any holes) that is used for tucking the side cover into the door frame. Two door stickers are needed per door and typically have been clamped into the door frame before the customer first receives the yurt.

Drip Edge – 3/8” exterior plywood strips, usually 8” wide, that are attached to the outer perimeter of your circular platform (should extend 1” above the interior floor). The lattice wall will butt against the inner face of the drip edge, while the side cover attaches to the outer face.

Plumb – Perpendicular position; vertical.

Safety cable – 1/8” diameter cable strung through the holes in the rafters nearest the center ring. This cable holds the rafters into the center ring so that they cannot fall out. The safety cable is included on all 12’, 14’ and 16’ yurts and on 20’, 24’ or 30’ yurts that **do not have** the Snow & Wind Kit option.

Turnbuckle – A device in the form of a sleeve connector, or union, usually with threaded rods, for regulating the length or tension of connected ropes or cables.

Twist lock – Metal “common sense” fastener that attaches the top cover to the door frame. It has a screw shank on one end and a turn-button on the other end.

Valance – Portion of the top cover that overhangs the exterior wall.

©2017 Pacific Yurts Inc.

Limited Warranty

Standard vinyl top covers carry a ten (10) year pro-rated fabric warranty from the manufacturer. Premium (heavy duty) top covers carry a fifteen (15) year pro-rated warranty from the manufacturer. Standard side covers carry a five (5) year pro-rated fabric warranty from the manufacturer. These warranties do not apply to fabrication workmanship, normal color fading or stiffening of the fabric which occurs naturally over time.

Pacific Yurts Inc. warrants all of their products for a period of one (1) year from the date of purchase. We will repair or replace, at our option, any product covered under this warranty which proves to be defective in materials or workmanship during the warranty period.

The above warranties do not apply if the unit was subject to abuse, neglect, accidental damage or if the instructions outlined in the set-up manual were not properly followed. All shipping costs on replacement parts or returned merchandise are the responsibility of the customer. Warranties are not transferable and extend only to the original purchaser of the product.

PROMPT DISPOSITION. Pacific Yurts Inc. will make a good faith effort for prompt correction or other adjustment with respect to any product which proves to be defective within the warranty. For any product believed to be defective within the warranty, call or write to Pacific Yurts Inc., giving name, address, date of purchase and description of defect. If product was damaged in transit to you, please file a claim with responsible carrier.

THE FOREGOING WARRANTY IS AN EXCLUSIVE REMEDY AND IS IN LIEU OF ALL OTHER WARRANTIES, EXPRESS OR IMPLIED, INCLUDING, BUT NOT LIMITED TO, ANY IMPLIED WARRANTIES OF MERCHANTABILITY OR FITNESS FOR A PARTICULAR PURPOSE. THE EXPRESS OBLIGATION OF PACIFIC YURTS INC. STATED ABOVE IS IN LIEU OF ALL LIABILITIES OR OBLIGATIONS OF PACIFIC YURTS INC. FOR DAMAGES INCLUDING, BUT NOT LIMITED TO, COMPENSATORY DAMAGES, CONSEQUENTIAL DAMAGES, INCIDENTAL DAMAGES, SPECIAL DAMAGES, INDIRECT DAMAGES, LOST PROFITS, OR OTHER DAMAGES, COSTS OR EXPENSES ARISING OUT OF OR RELATING TO THE DELIVERY, USE OR PERFORMANCE OF THE PRODUCT.

Pacific Yurts Inc. assumes no responsibility or liability relating to or arising out of Purchaser's selection of the location for the yurt. Purchaser expressly assumes all risk of loss, injury or damage relating to or arising out of the installation, set-up or site location of the yurt. In particular, but without limitation, Pacific Yurts, Inc. shall not be responsible or liable for any loss, injury or damage relating to or arising out of any forces of nature or acts of God.

Pacific Yurts Inc. makes no representations, warranties or promises as to whether the yurt will satisfy any applicable laws, statutes, regulations or rules including, but not limited to, zoning or land use regulations or building codes**.**

This Agreement is governed by the laws of the state of Oregon and shall be interpreted and construed by Oregon's version of the Uniform Commercial Code. Venue and jurisdiction of any legal proceeding relating to or arising out of this Agreement shall be in Lane County, Oregon.

In the event of any legal proceeding arising out of or relating to the enforcement or interpretation of this Agreement, the prevailing party in such proceeding shall be entitled to recover its reasonable attorney fees incurred therein, including any appeal thereof, in addition to such costs, disbursements and damages as are allowed by law.

This is the complete and final Agreement of Purchaser and Pacific Yurts Inc. and entirely replaces all other representations, negotiations, discussions, correspondence, communications or agreements.

Pacific Yurts Inc.
77456 Hwy. 99 S.
Cottage Grove, Oregon 97424

©2017 Pacific Yurts Inc.

Epilogue

We have tried to make these directions as clear and concise as possible; however, describing the erection of something as unique as a yurt is not easy. Just take your time the first time through and think it out before acting. You should be able to manage without any major problems. After putting your yurt up once or twice, you will appreciate the simple beauty of this structure and the integrity of its design. **If you have any questions about the installation of the yurt please call us at 1-800-944-0240.**

Best wishes from Pacific Yurts.

©2017 Pacific Yurts Inc.

Application Request
for Variance from the Land Use Code

The Zoning Board of Appeals has been granted the authority to approve variances from the requirements of Articles 3 and 4 of the Land Use Code. The Zoning Board of Appeals shall not authorize any use in a zoning district other than those uses which are specifically permitted in the zoning district. The Board may grant variances where it finds that the modification of the standard **would not be detrimental to the public good**. Additionally, the variance request must meet at least one of the following justification reasons:

(1) by reason of exceptional physical conditions or other extraordinary and exceptional situations unique to the property, including, but not limited to physical conditions such as exceptional narrowness, shallowness, or topography, the strict application of the code requirements would result in unusual and exceptional practical difficulties or undue hardship upon the occupant/applicant of the property, provided that such difficulties or **hardship** are not caused by an act or omission of the occupant/applicant (i.e. not self-imposed);

(2) the proposal will promote the general purpose of the standard for which the variance is requested **equally well or better than** would a proposal which complies with the standard for which the variance is requested;

(3) the proposal will not diverge from the Land Use Code standards except in a **nominal, inconsequential way** when considered in the context of the neighborhood.

This application is only for a variance to the Land Use Code. Building Code requirements will be determined and reviewed by the Building Department separately. When a building or sign permit is required for any work for which a variance has been granted, the permit must be obtained within 6 months of the date that the variance was granted.

However, for good cause shown by the applicant, the Zoning Board of Appeals may consider a one-time 6 month extension if reasonable and necessary under the facts and circumstances of the case. An extension request must be submitted before 6 months from the date that the variance was granted has lapsed.

Petitioner or Petitioner's Representative must be present at the meeting

Location: 300 LaPorte Ave, Council Chambers, Fort Collins, CO 80524

Date: Second Thursday of the month Time: 8:30 a.m.

Variance Address	609 City Park	**Petitioner's Name, if not the Owner**	Mike Rush
City	Fort Collins, CO	**Petitioner's Relationship to the Owner is**	Architect
Zip Code	80521	**Petitioner's Address**	2504 Constitution Ave
Owner's Name	John Papile	**Petitioner's Phone #**	9702901416
Code Section(s)	4.4D1; 4.4DE; 4.4D2,B,C,D; 3.3.2D6	**Petitioner's Email**	aresidentialarch@gmail.com
Zoning District	RL	**Additional Representative's Name**	
Justification(s)	2. Equal to or better than	**Representative's Address**	
Justification(s)	2. Equal to or better than	**Representative's Phone #**	
Justification(s)	2. Equal to or better than	**Representative's Email**	
Reasoning If not enough room, additional written information may be submitted	1. Request site coverage variance. The main level floor area is slightly over allowable 1/3 lot coverage by (2.74%). Allowable main level area - 2433, proposed 2500. The lot area is 7300 sqft. Applicant wants to retain existing home and provide for long term capital renewal of the property as their primary residence. While over the allowable site coverage area, the proposed project retains the existing home, and the proposed addition and renovation exhibits appropriate scale, proportions, massing and modulation that reflects the surrounding homes and contributes		

Date 20 April, 2020 **Signature** John Papile, Eileen McCluskey

A Residential Architect, Inc.
Mike Rush, AIA, DBIA, ICC, CBO
2504 Constitution Ave
Fort Collins, CO 80526
1.970.290.1416
aresidentialarch@gmail.com

A RESIDENTIAL ARCHITECT, INC. • MIKE RUSH, AIA

City of Fort Collins Planning Department

April 20, 2020

RE:
Request for Variance to the CFC Land Use Code
Jay Papile and Eileen McCluskey
For 609 City Park

Dear City of Fort Collins Planning Department,

On December 20, 2019, John Papile (Owner) and Mike Rush (Architect) met with City of Fort Collins Planning staff to discuss proposed improvements to 609 City Park. Improvements include an approximate 1400 sqft grade level addition and renovation of the existing 1100 sqft residence. We reviewed requested modifications to site setback and site coverage requirements for the RL zoning district and determined current requirements of the Landmark Preservation Committee where the property is not designated. We discussed the following issues and solutions:

1. Request site coverage variance. The proposed main level floor area is slightly over allowable 1/3 lot coverage by (2.74%). Allowable main level area - 2433, proposed 2500. The lot area is 7300 sqft. Applicant wants to retain existing home and provide for long term capital renewal of the property as their primary residence. While over the allowable site coverage area, the proposed project retains the existing home, and the proposed addition and renovation exhibits appropriate scale, proportions, massing and modulation that reflects the surrounding homes and contributes to the neighborhood fabric. Height to peak of highest roof is around 25' less than the maximum of 28'. Zoning immediately adjacent is less restrictive and exhibits higher density than that proposed. Accommodations for sympathetic adaptive reuse and capital renewal retains the historic fabric of the existing home and provides an opportunity for infill development promoted by the Land Use Code. Finish floor elevation for the addition is set approximately 3'-0" lower than the existing to help emulate existing scale and modulation especially when blending the roof lines.

2. Request setback variance - 609 City Park is a corner lot with City Park to the east and Crestmore to the south. Assume 20' front yard setback required on both streets. Line of existing house is setback 10'-8" from south property line at Crestmore. Propose to align the new addition with the existing residence as indicated on the site plan, floor plan and building elevations/ axonometrics.

3. Request relocation of existing drive off City Park. Propose to relocate existing drive to Crestmore towards the west side of the lot. Anticipate the relocation will improve pedestrian safety and traffic considerations. See site plan.

We have completed the required request for variance and included relevant drawings to indicate the architectural character of the proposed project. Please let me know if anything else is need to complete and promote he request.

Thank You! Mike

Mike Rush, AIA, DBIA, ICC, CBO
A Residential Architect, Inc.

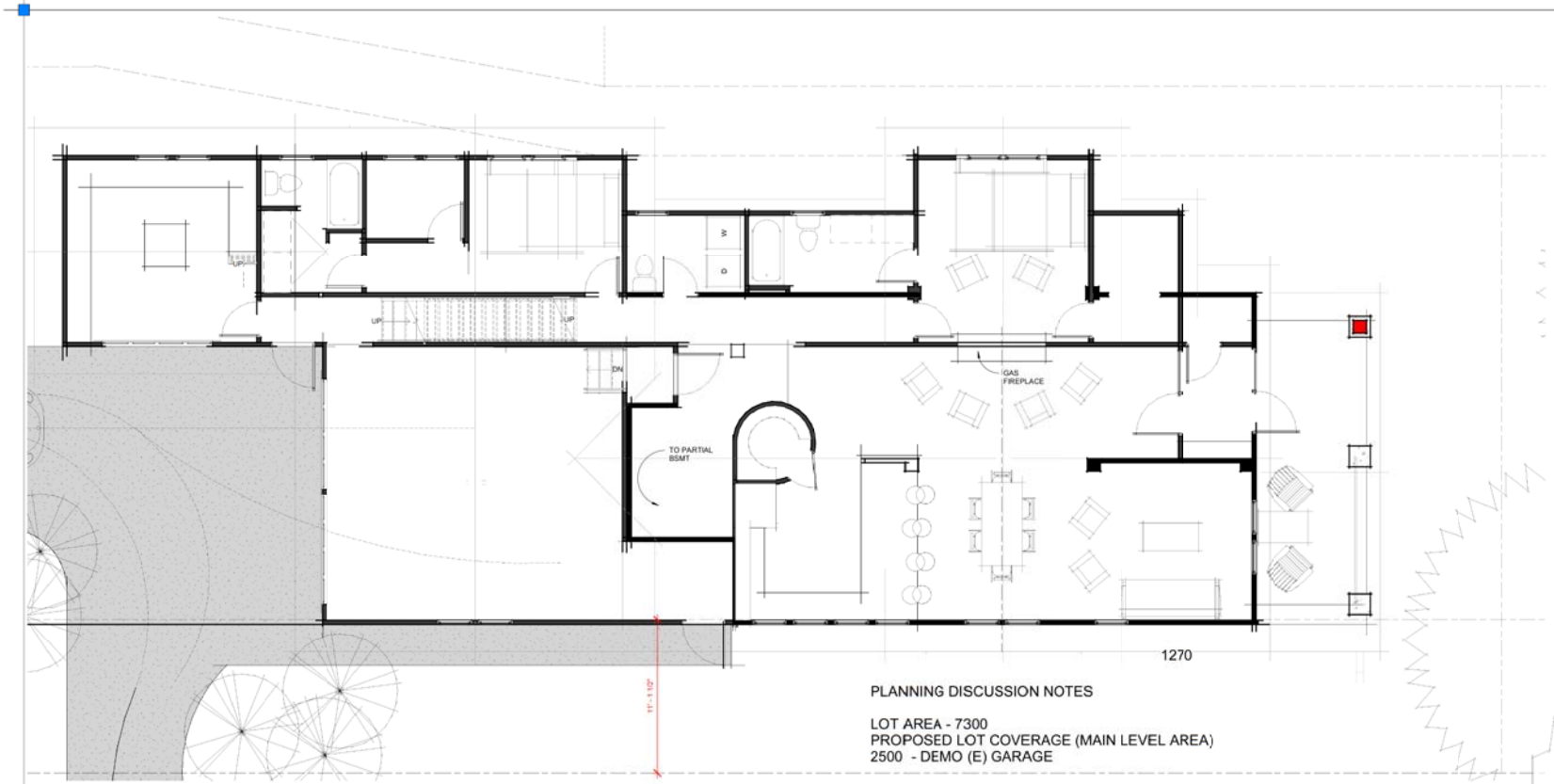

PLANNING DISCUSSION NOTES

LOT AREA - 7300
PROPOSED LOT COVERAGE (MAIN LEVEL AREA)
2500 - DEMO (E) GARAGE

A RESIDENTIAL ARCHITECT INC. - MIKE and BEN RUSH
+1 (970) 290 1146 - mikerusharchitect@gmail.com +1 (970) 305 7984
2 0 1 0 CONSTITUTION AVE FORT COLLINS, CO 8 0 5 2 4

John and Eileen
609 City Park
Fort Collins, Colorado

DELIGHT

Author

Checker

3/1/2020 3:53:35 PM

A102

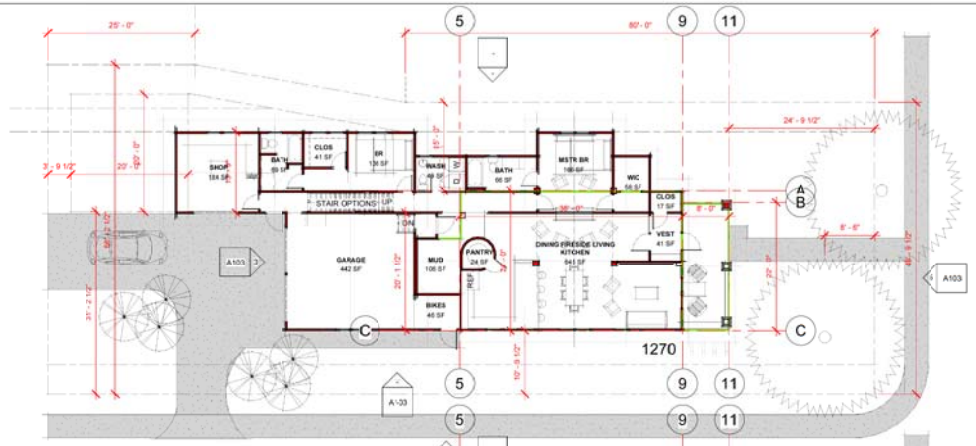

1 Level 1
1" = 10'-0"

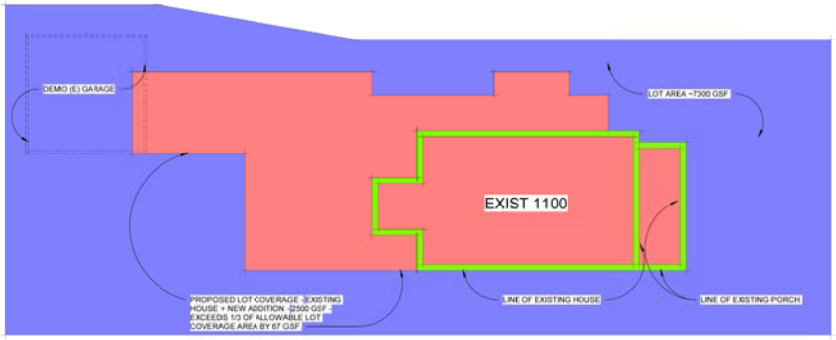

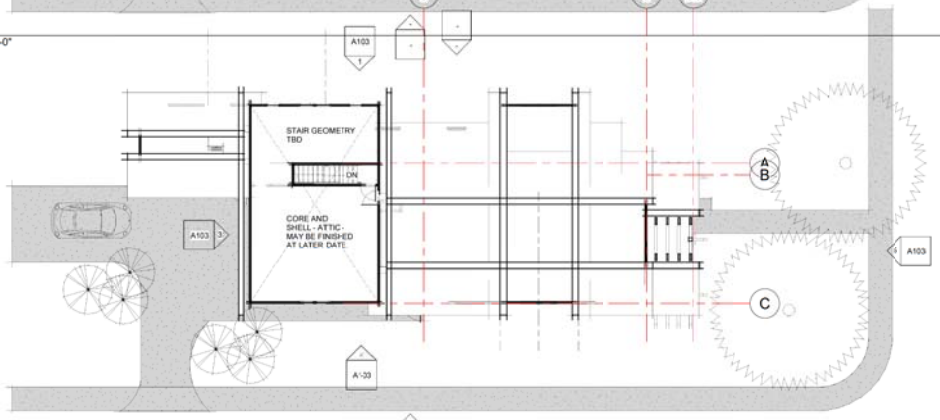

2 TO (E) PLATE
1" = 10'-0"

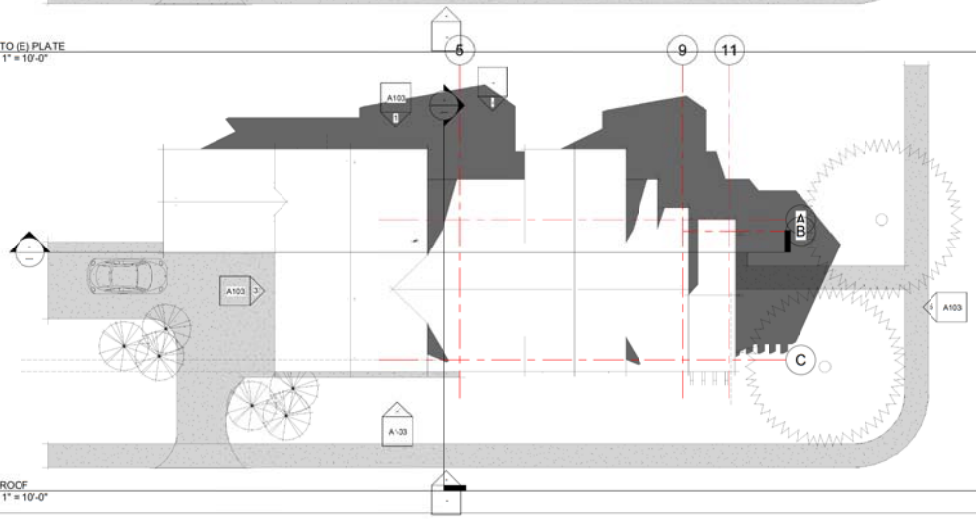

3 ROOF
1" = 10'-0"

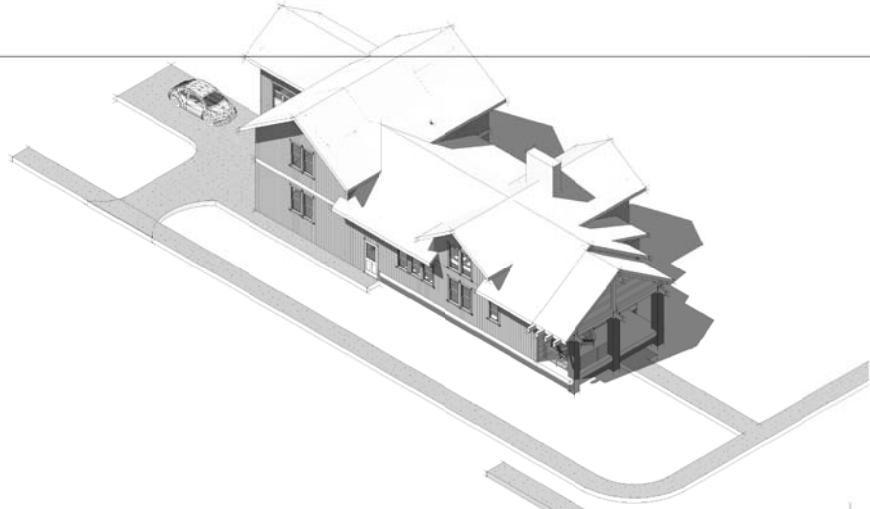

A RESIDENTIAL ARCHITECT INC. - MIKE and BEN RUSH
+1 (970) 290 1146 - mjcrushbuilding@gmail.com +1 (970) 305 7984
2 8 0 8 CONSTITUTION AVE FORT COLLINS, CO 8 0 5 2 6

John and Eileen
609 City Park
Fort Collins, Colorado

OPTIONJ DEMO EXISTING GARAGE - TWO STORY ADD

Author

Checker

3/4/2020 2:28:46 PM

A101

1 North
1/8" = 1'-0"

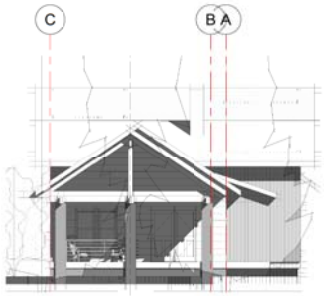

5 East - CITY PARK Copy 1
1/8" = 1'-0"

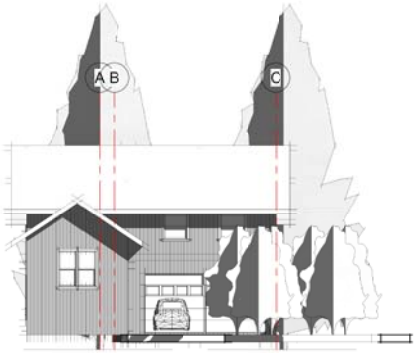

3 West
1/8" = 1'-0"

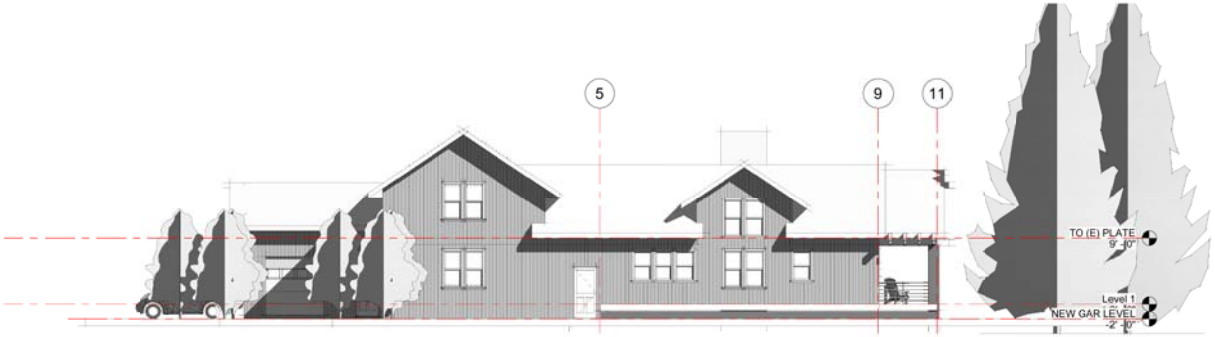

2 South
1/8" = 1'-0"

7 3D View 5

4 3D View 4

6 3D View 3

A RESIDENTIAL ARCHITECT INC. MIKE and BEN RUSH
+1 (970) 290 1146 mpcarbodbenrg@gmail.com +1 (970) 305 7984
2 B B 6 CONSTITUTION AVE FORT COLLINS, CO 8 0 5 2 4

John and Eileen
609 City Park
Fort Collins, Colorado

Unnamed

Author

Checker

3/4/2020 2:06:50 PM

A103

Application Request
for Variance from the Land Use Code

The Zoning Board of Appeals has been granted the authority to approve variances from the requirements of Articles 3 and 4 of the Land Use Code. The Zoning Board of Appeals shall not authorize any use in a zoning district other than those uses which are specifically permitted in the zoning district. The Board may grant variances where it finds that the modification of the standard **would not be detrimental to the public good**. Additionally, the variance request must meet at least one of the following justification reasons:

(1) by reason of exceptional physical conditions or other extraordinary and exceptional situations unique to the property, including, but not limited to physical conditions such as exceptional narrowness, shallowness, or topography, the strict application of the code requirements would result in unusual and exceptional practical difficulties or undue hardship upon the occupant/applicant of the property, provided that such difficulties or **hardship** are not caused by an act or omission of the occupant/applicant (i.e. not self-imposed);

(2) the proposal will promote the general purpose of the standard for which the variance is requested **equally well or better than** would a proposal which complies with the standard for which the variance is requested;

(3) the proposal will not diverge from the Land Use Code standards except in a **nominal, inconsequential way** when considered in the context of the neighborhood.

This application is only for a variance to the Land Use Code. Building Code requirements will be determined and reviewed by the Building Department separately. When a building or sign permit is required for any work for which a variance has been granted, the permit must be obtained within 6 months of the date that the variance was granted.

However, for good cause shown by the applicant, the Zoning Board of Appeals may consider a one-time 6 month extension if reasonable and necessary under the facts and circumstances of the case. An extension request must be submitted before 6 months from the date that the variance was granted has lapsed.

Petitioner or Petitioner's Representative must be present at the meeting

Location: 300 LaPorte Ave, Council Chambers, Fort Collins, CO 80524

Date: Second Thursday of the month Time: 8:30 a.m.

Variance Address	420 N Grant Ave	**Petitioner's Name, if not the Owner**	
City	Fort Collins, CO	**Petitioner's Relationship to the Owner is**	
Zip Code	80521	**Petitioner's Address**	420 N Grant Ave Fort Collins CO
Owner's Name	Gregory Menning	**Petitioner's Phone #**	312-731-1402
Code Section(s)	4.8 (NCM) (D) (1) & 4.8 (NCM) (E) (1)	**Petitioner's Email**	gmenning@gmail.com
Zoning District	R-Residential	**Additional Representative's Name**	
Justification(s)	2. Equal to or better than	**Representative's Address**	
Justification(s)	Additional Justification	**Representative's Phone #**	
Justification(s)	Additional Justification	**Representative's Email**	
Reasoning If not enough room, additional written information may be submitted	Please see attached written document.		

Date 11MAY2020 **Signature**

Updated 02.18.20

Gregory Menning

420 N Grant Ave

Fort Collins, CO 80521

312-731-1402

gmenning@gmail.com

May 11, 2020

City of Fort Collins

Zoning Board of Appeals

281 N. College Avenue

Fort Collins, CO 80524

To whom it may concern:

I am requesting two variances to the Fort Collins Land Use Code in the development of the property at 420 Grant Avenue (Parcel # **97112-21-9017).** The lot was originally platted as two separate properties, and I would like to restore it back to its original condition as (2) separate 35' wide lots at 4,921.5 SF each (Legal description: Lots 18 and 19, Block 294, East Side). The first variance requested is to code section 4.8 (NCM) (D) (1) to reduce the lot size of each home from 5,000 SF minimum as required by the Land Use Code for the NCM zone to 4,921.5 SF. The second variance requested is to code section 4.8 (NCM) (E) (1), to allow a reduction in lot width for each property from 40' as required by the Land Use Code to 35'.

I believe the proposal as submitted to divide the property back into its original intent will not diverge from the standards of the Land Use Code except in a nominal, inconsequential way when considered in the context of the neighborhood. In researching similar properties in the neighborhood, approximately half of the surrounding properties are 35' in width and have a similar lot size with respect to square footage. The lots were originally platted as (2) separate 35' wide lots, so I would be restoring the property back to its original condition, where the lots size will be less than 80 SF below the minimum standard. Lastly, it will allow for improvement of the existing space, and removal of a home in poor condition. I intend to develop these lots with 2 modest size homes and detached garages that will restore this region of the neighborhood. I have attached initial drawings of 2 conceptual designs that will fit into the neighborhood and comply with current Land Use Code regulations and square footage regulations.

I appreciate your consideration of this proposal.

Sincerely,

Gregory Menning

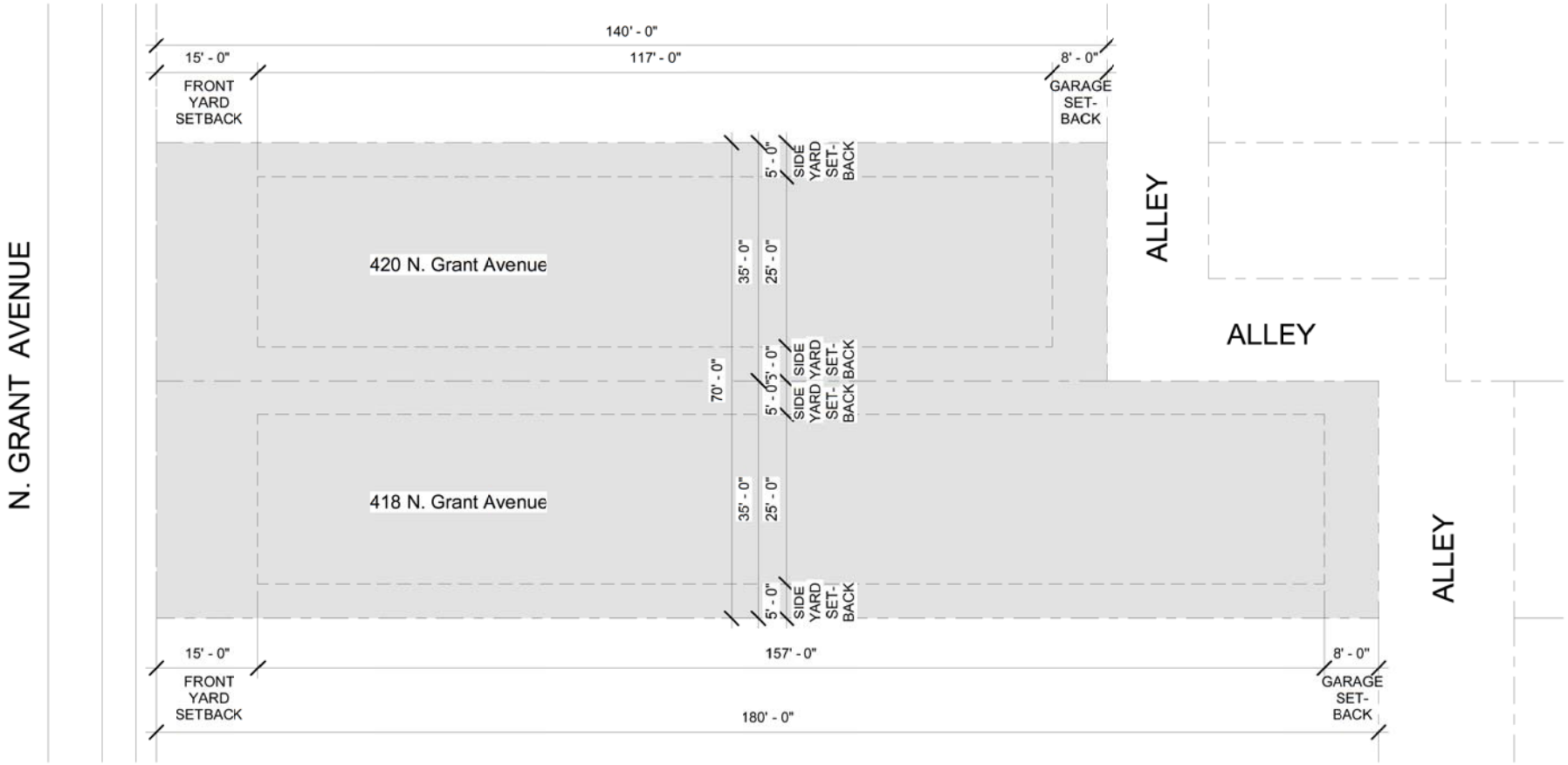

1
A1

PROPOSED SITE PLAN

SCALE: 1/16" = 1'-0"

4.09.20

studio S
architecture
715 west mountain avenue
fort collins, colorado 80521
phone: 970.231.1040
e-mail: heidishuff@gmail.com

MENNING LLC
420 N. Grant Avenue
Fort Collins, Colorado

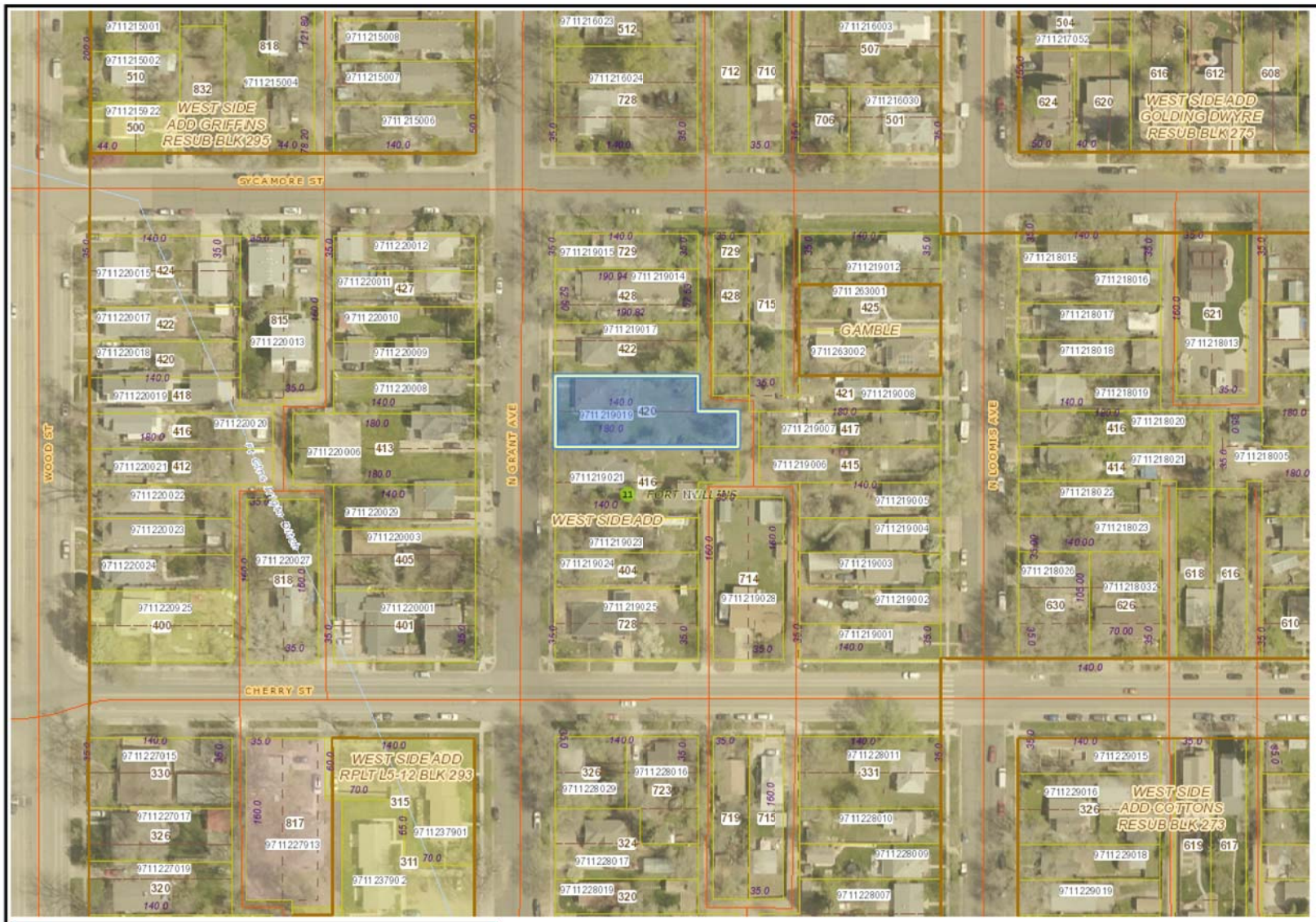

LARIMER COUNTY
COMMITTED TO EXCELLENCE
ENTERPRISE GIS

Larimer County Web Map

Legend

- Addresses
- Subdivisions
- Tax Parcels
- Platted Lots
- Home Owners Assoc & Severed Mineral Rights
- Recorded Dimensions
- PLSS Township and Range
- PLSS Sections
- PLSS Quarter Sections
- Railroads
- Major Road System
- Road System
- Lakes and Ponds
- Major Rivers and Streams
- Rivers and Streams
- County Boundary
- Rocky Mountain National Park
- Incorporated Areas
- City or Town
- County
- State
- Federal
- Other

Notes

0.03 Miles 0 0.01 0.03

1: 1,200

NAD_1983_HARN_StatePlane_Colorado_North_FIPS_0501_Feet

This map was created by Larimer County GIS using data from multiple sources for informal purposes only and may not have been prepared for, or be suitable for legal, engineering, or surveying purposes. This map may not reflect recent updates prior to the date of printing. Larimer County makes no warranty or guarantee concerning the completeness, accuracy, or reliability of this content.