M1-4 5

TYPE "A". FINISHES TO BE DETERMINED

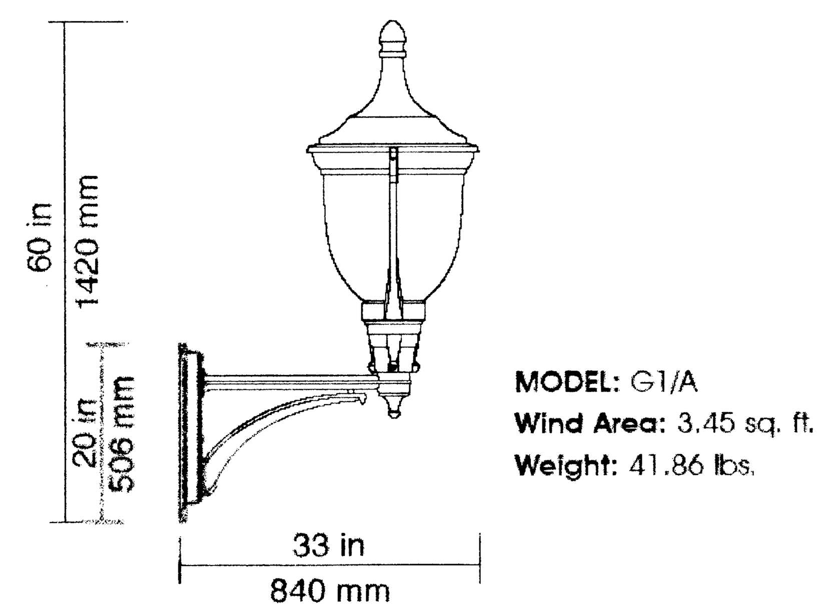

MODEL: G1/A
Wind Area: 3.45 sq. ft.
Weight: 41.86 lbs.

TYPE "AA". FINISHES & POLE TO BE DETERMINED

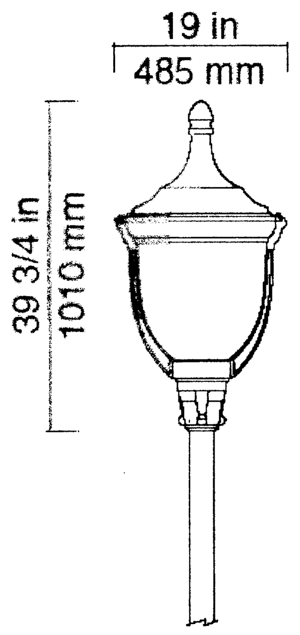

MODEL: I1
Wind Area: 2.8 sq. ft.
Weight: 30.86 lbs.

LIGHT SOURCES/OPTICS - OSLO

	Source	Socket	Ballast	Voltages	Mountings Available
	CFL 18 to 57	4-pin base	electronic	120, 208, 240, 277, 347	all
	MH 50 to 175	PR medium base	HPF magnetic	120, 208, 240, 277, 347	all
X	HPS 50 to 175	PR medium base	HPF magnetic	120, 208, 240, 277, 347	all
	INC 200	medium base	none	120	all

Notes: Higher wattage ballasts may be available, but may require remote ballast location in wallbox or post base.

AVAILABLE OPTICS

	Code	Description	Requirements
	~~RAS~~	~~hydro-formed type III reflector~~	~~remote ballast~~
X	Type II	specular aluminum type II reflector	remote ballast

TYPES "A" & "AA" ARE CUT-OFF LUMINAIRES WITH MATCHING STYLE TO PEDESTRIAN POLE LIGHTS CURRENTLY LOCATED ON NORTH COLLEGE AVENUE. THE LAMP IS FULLY SHIELDED INSTALLED WITHIN THE TOP OF THE FIXTURE.

PLANNING REVIEW NOTE: FINISHES WILL BE ANODIZED OR OTHERWISE COATED TO MINIMIZE GLARE.

LUMINAIRE SCHEDULE

Symbol	Label	Qty	Catalog Number	Description	Lamp	Lumens	LLF	Watts	MH OF LAMP	TILT
○	FC	1	GENERAL ELECTRIC, M2RC15S0A2GMC 3-029 (GE UPT15HP00BG3/S D- 90-180 USED FOR CALCS)	UTILITY POSTOP	150W CLEAR HPS	16000	1.00	168	NOTE - A	0
○	A	4	NORAL OSLO G1/A 50W HPS	NORAL OUTDOOR OSLO I1 LUMINAIRE WITH TYPE II REFLECTOR AND CLEAR ACRYLIC LENS	ONE 50W CLEAR HPS LAMP.	4000	1.00	64	NOTE - B	0
⊟	B	9	KIM SW3-32PL120--2700K LAMP	WALLFORM LUMINAIRE CAST ALUM HEAD WALL MOUNT MODIFIED FROM 70W ITL46019	32 WATT COMPACT FLUORESCENT; GX24q-3; 2700 K; 0 DEGREE STARTING	2400	1.00	35	NOTE - B	0
▯	C	3	LITHONIA VSL 2 32 (OR EQUAL) BUILDING ELECTRICAL ENGINEER TO SPECIFY.	ENCLOSED LINEAR FLUORESCENT VSL, 1' X 4' 2 LAMP T8, MOLDED PRISMATIC LENS.	TWO 32-WATT T8 LINEAR FLUORESCENTS.	2850	1.00	60	NOTE - C	0
⊡	AA	1	NORAL OSLO I1 50W HPS POLE STYLE TO BE DETERMINED	NORAL OUTDOOR OSLO I1 LUMINAIRE WITH TYPE II REFLECTOR AND CLEAR ACRYLIC LENS	ONE 50W CLEAR HPS LAMP.	4000	1.00	64	15'	0

NOTES:
A - TYPE "FC" IS A STREET LIGHT OWNED AND MAINTAINED BY THE CITY OF FORT COLLINS. INCLUDED IN CALCULATIONS.
B - REFER TO ARCHITECTURAL ELEVATION DRAWINGS.
C - TYPE "C" LUMINAIRES ARE PROVIDED TO SHOW IMPACT OF GARAGE ENTRY LIGHTING. BUILDING ENGINEER SHALL MAKE FINAL SELECTION.

STATISTICS

Description	Avg	Max	Min	Max/Min	Avg/Min
AUTO RAMP	1.7 fc	6.7 fc	0.3 fc	22.3:1	5.7:1
EAST BLDG SURROUNDS	2.2 fc	3.7 fc	0.0 fc	N / A	N / A
EAST ENTRY	2.7 fc	3.0 fc	2.3 fc	1.3:1	1.2:1
EAST PEDESTRIAN RAMP	2.0 fc	3.1 fc	0.8 fc	3.9:1	2.5:1
ENTRY DRIVE/LOADING	1.4 fc	2.6 fc	0.7 fc	3.7:1	1.9:1
FRONT WALK	2.3 fc	3.8 fc	0.4 fc	9.5:1	5.7:1
NW PATIO	1.8 fc	4.6 fc	0.3 fc	15.3:1	6.1:1
OFF PROPERTY-CHERRY STREET	0.5 fc	1.2 fc	0.0 fc	N / A	N / A
OFF PROPERTY EAST	0.5 fc	3.3 fc	0.0 fc	N / A	N / A
OFF PROPERTY NORTHWEST	0.1 fc	0.5 fc	0.0 fc	N / A	N / A
South Entry	3.8 fc	5.2 fc	2.4 fc	2.2:1	1.6:1

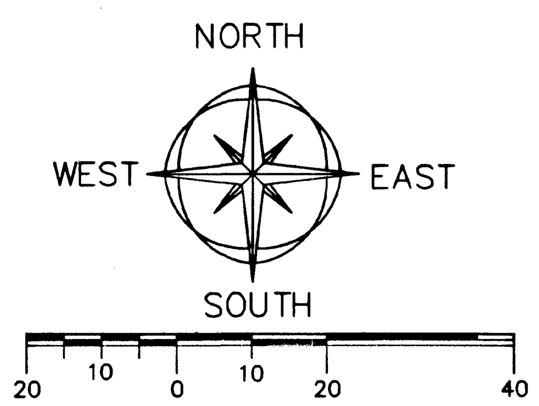

Reset Form

KIM LIGHTING

SW3
Site Wallforms
revision 6/13/05 • sw3.pdf

Type: **TYPE "B". FINISHES TO BE DETERMINED**
Job:
Catalog number:

SW3 / **32PL*** /
Fixture / Electrical Module / Luminaire Finish — See page 2

Approvals:

Date:
Page: 1 of 2

Specifications

SW3 Model
50 watt H.I.D.
Medium Base Lamps
42 watt Compact Fluorescent

SW3
Maximum weight: 8 lb

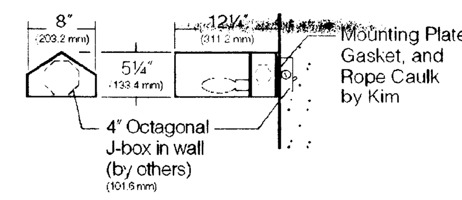

TYPE "B" IS A FULL CUT-OFF LUMINAIRE WITH A FLAT LENS. LIGHT IS DIRECTED DOWNWARD.

Head: One-piece cast, low-copper (<0.6 Cu) aluminum, 3/16" wall thickness with external reveal. Attachment to wall is by two bolts concealed within the head.

Reflector and Socket: Formed specular Alzak® reflector panel secured to a harness which holds a porcelain medium base 4KV socket (H.I.D. and Incandescent), GX24q - Universal Socket (42W Fluorescent), or two single ended twin tube sockets (13W Fluorescent). Entire assembly is removable in one piece for access to mounting screws and is factory wired with a disconnect plug.

Lens: Clear flat ⅛" thick tempered glass retained by two stainless steel brackets, and four stainless steel, hex socket cap screws, fully gasketed.

Ballast: Factory mounted to removable harness within fixture head. Wire leads supplied with disconnect plugs. **H.I.D.:** High power factor with starting temperatures of -20°F. for PMH and -40°F. for HPS lamp modes. **13W Fluorescent:** 120V 32°F. starting; 277V 0°F. starting. **26W, 32W, 42W Fluorescent:** High power factor with starting temperature of 0°F.

Mounting Plate: Zinc plated steel for attachment to standard 4" octagonal Junction Box. Gasket provided between mounting plate and fixture plus rope caulk between fixture and wall.

Finish: Super TGIC thermoset polyester powder coat paint, 2.5 mil nominal thickness, applied over a Titanated Zirconium conversion coating; 2500 hour salt spray test endurance rating. Standard colors are Black, Dark Bronze, Light Gray, Platinum Silver, or White. Custom colors are available.

CAUTION: Fixtures must be grounded in accordance with local codes or the National Electrical Code. Failure to do so may result in serious personal injury.

Listings and Ratings		
UL cUL 1598	—	25C Ambient
IP46 Rated	CE	ISO 9001:2000
Co (Full) Cut Off[1]		

[1]Dark Sky Legislation Compliant

Hubbell Lighting, Inc.

© 2005 KIM LIGHTING INC. • P.O. BOX 60080, CITY OF INDUSTRY, CA 91716-0080 • TEL: 626/968-5666 • FAX: 626/369-2695 5611805164

LITHONIA LIGHTING®

Catalog Number
EXACT PRODUCT TO BE DETERMINED
Notes
BY INTERIOR LIGHTING DESIGNER
Type **C**

Enclosed Linear Fluorescent

VSL

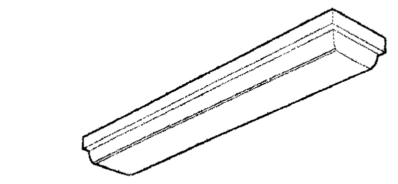

2 or 3 Lamps
2' or 4' Length

FEATURES & SPECIFICATIONS

INTENDED USE
Surface-mounted enclosed luminaire provides general illumination for rough service, ceiling or wall mount applications. Ideal for areas that require higher levels of protection from physical assault, while providing proper illumination for safety or security.

ATTRIBUTES
Designed for high efficiency, low lens brightness, and excellent lens surface uniformity. Uses T8 lamps and electronic ballast components.

CONSTRUCTION
Housing – Heavy-duty, 16-gauge cold rolled steel, one-piece housing for durability and security.
Ballast Cover – Ballast and lampholders are installed to ballast cover to provide easy installation and service. Ballast cover safety chains included.
Gasket – One piece, closed cell neoprene pad mounting gasket is factory-installed to help seal against moisture, dust and insects.

FINISH
Five-stage iron-phosphate pretreatment ensures superior paint adhesion and rust resistance. Painted parts finished with high-reflectance, white polyester powder coat.

OPTICAL SYSTEM
Clear prismatic, injection-molded and UV-stabilized polycarbonate lens (0.130 inch thickness) completely encloses face and all sides of housing. No exposed metal surfaces. Lens is secured to housing with tamper-resistant TORX® TX-20 screws with center-pin reject (included). Optional lens (SCE) features easily removable molded-in lens membranes centered over endplate knockouts for surface conduit and wiring access. See instructions for continuous row mounting.

ELECTRICAL SYSTEM
Thermally-protected, resetting, Class P, HPF, non-PCB, UL listed, CSA certified ballast is standard. GEB, GEB10IS and MVOLT electronic ballasts have 0°F start temperature.

LISTING
UL listed to US and Canadian safety standards (see Options). UL listed and labeled for wet locations. Specifications subject to change without notice.

Specifications

	VSL 2'	VSL 4'
Length:	25-3/8" (64.5)	49-3/8" (125.4)
Width:	8-7/8" (22.5)	8-7/8" (22.5)
Depth:	3-3/8" (86)	3-3/8" (86)
Weight:	13lbs/6kg	25lbs/11kg

All dimensions are inches (millimeters).

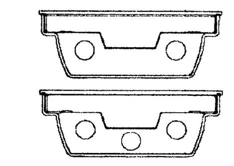

ORDERING INFORMATION

Choose the boldface catalog nomenclature that best suits your needs and write it on the appropriate line. Order accessories as separate catalog number.

Example: **VSL 2 32 MVOLT GEB10IS**

VSL

Series	Lamps[1]	Wattage	Lens Type	Voltage
VSL	2, 3[2]	**17** 17W T8 (24")[3] **20** 20W T12 (24") **32** 32W T8 (48")[3] **40** 40W T12 (48")	**(blank)** Solid-end lens **SCE** Surface conduit entry lens[4]	**120** **277** **347** **MVOLT**[5]

Options
Shipped installed in fixture
DL Damp location
ELDW Emergency lighting wet location[6]
GEB Electronic ballast ≤20% THD
GEB10IS Instant start electronic ballast ≤10% THD
GEB10RS Rapid start electronic ballast ≤10% THD
GLR Internal fast-blow fusing
NLCF Compact fluorescent night-light (9W max)[7]
RIF1 Radio interference filter, one per fixture
RIF2 Radio interference filter, one per ballast
CSA Listed and labeled to comply with Canadian Standards

Accessories
Order as separate catalog number
RK1 T20BIT Hex-base driver bit, Torx® TX-20
RK1 T20DRV Screwdriver, Torx® TX-20
SCG Surface conduit gasket (one pair, not installed)

NOTES:
1 Lamps not included.
2 3-lamp model available in 32W T8 only.
3 Requires GEB, GEB10IS or GEB10RS option.
4 Provided with one pair of surface conduit gaskets.
5 Electronic ballast 120 through 277V only. MVOLT must specify GEB10IS.
6 Available in 4-foot fixtures only.
7 Not available in 3-lamp model.

Fluorescent and **Special Environments** — **Sheet #: VSL_SE** — LNFL-100

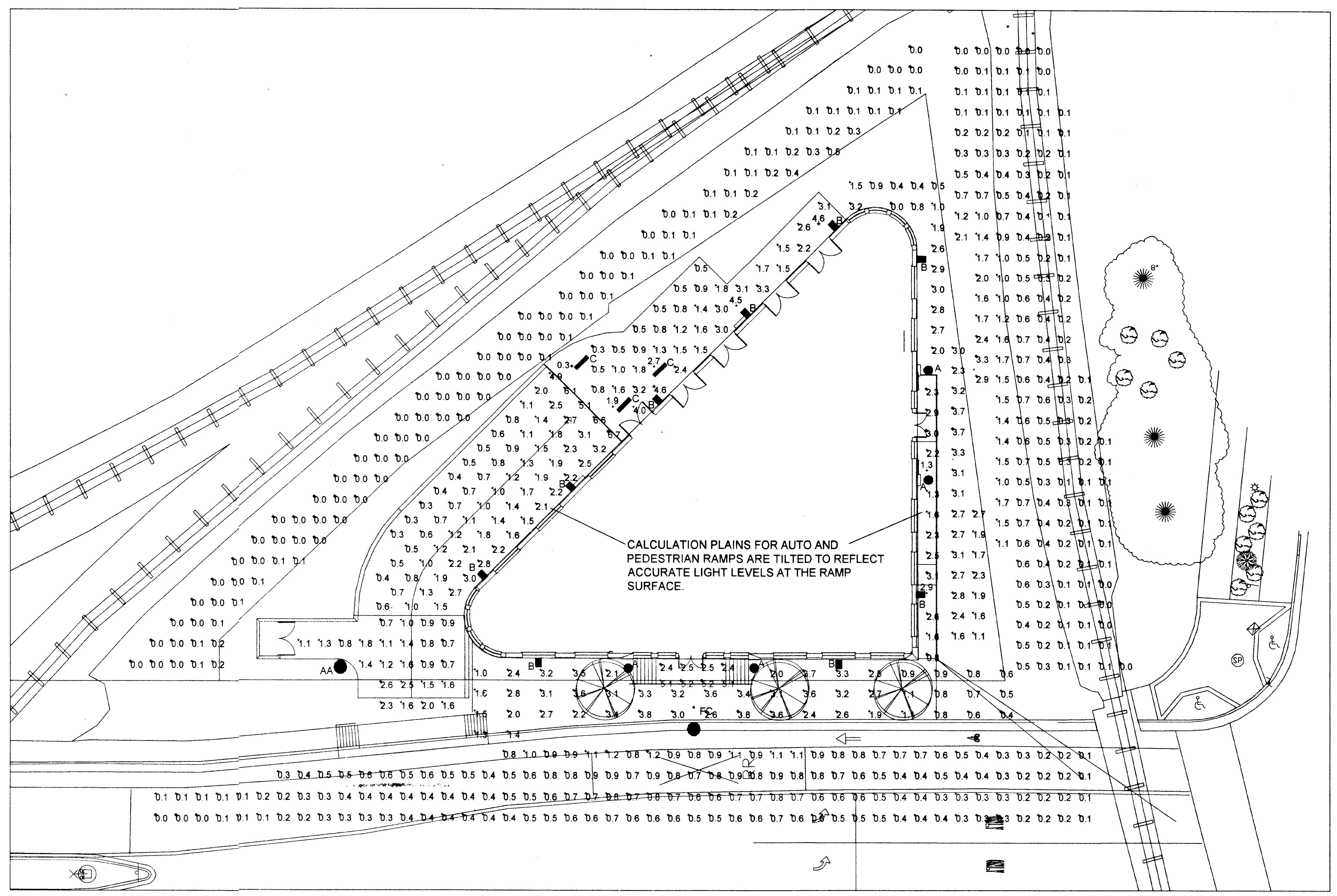

SITE LIGHTING

CHERRY STREET STATION
CHERRY STREET
FORT COLLINS, COLORADO

SITE LIGHTING

ILLUMINATION PLANNING, Ltd.
2408 TAMARAC DRIVE
FORT COLLINS, CO 80521
970-482-2277

DISCLAIMER: CHANGES OR MODIFICATIONS TO SPECIFIED LIGHTING EQUIPMENT, LOCATIONS OR MOUNTING HEIGHTS MAY ALTER PHOTOMETRIC PERFORMANCE AND THEREFORE CANNOT BE GUARANTEED TO MEET THE ORIGINAL CALCULATIONS OR LOCAL CODES. ALL MODIFICATIONS AND OPTIONS SHOULD BE SUBMITTED TO THE ORIGINAL DESIGNER FOR REVIEW AND COMMENT.

Original Issue Date	JUNE 22, 2005
Drawn By:	TJR
Revisions	Date
REVISION	12/28/05
REVISION	2/28/06
Current Issue Date	FEB. 28, 2006
Project No.	0511
Sheet Title	LP1
Sheet No.	1 of 1

M1'-4 5

This unofficial copy was downloaded on Jul-16-2019 from the City of Fort Collins Public Records Website: http://citydocs.fcgov.com
For additional information or an official copy, please contact Engineering Office 281 North College Fort Collins, CO 80521 USA